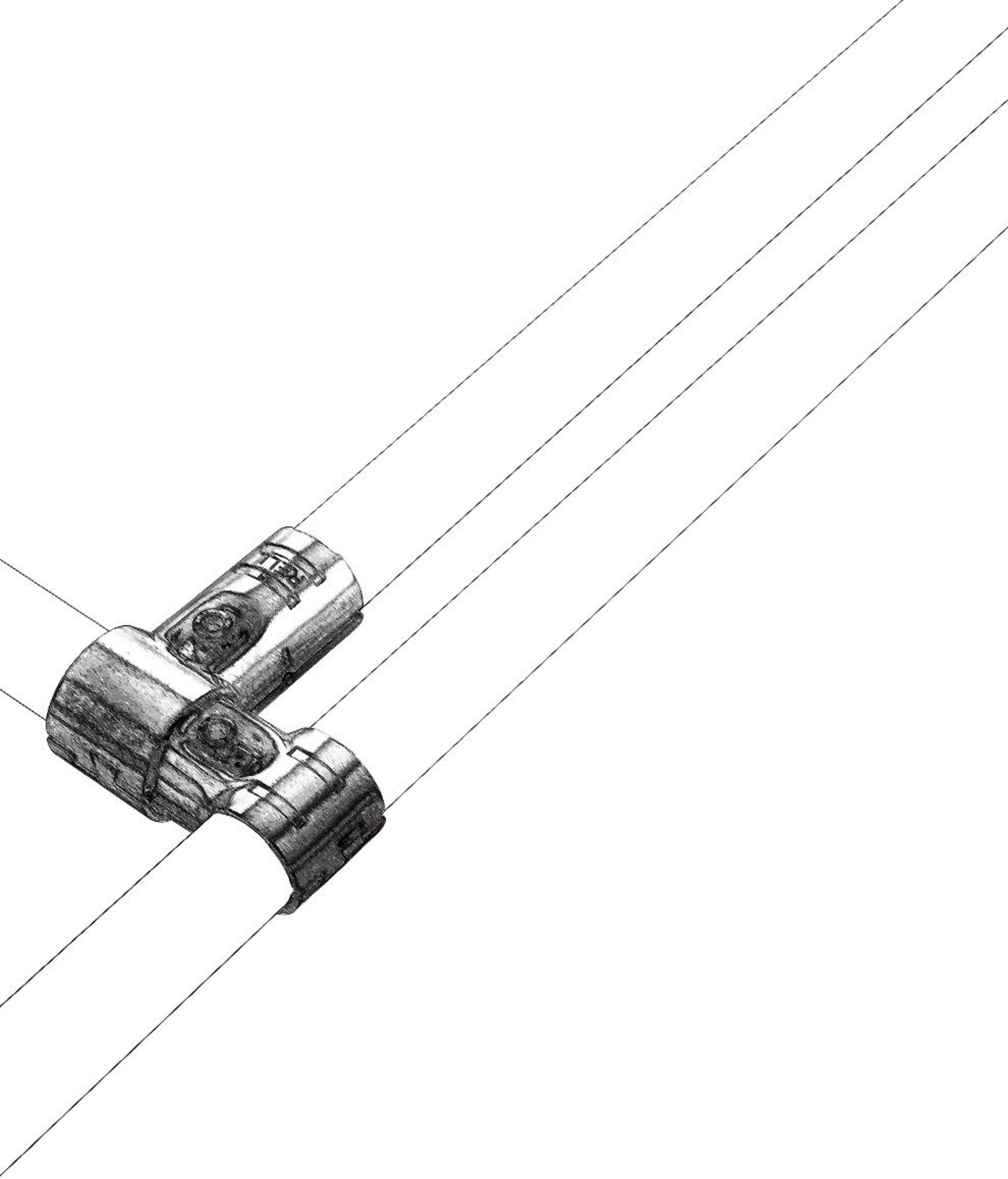

PIPE RACKING SYSTEM

# CONTENTS


PIPES — T Series — P01

METAL JOINTS — HJ Series — P05

METAL JOINTS — H Series — P11

ROLLER TRACKS — R Series — P15

PLASTICS — P Series — P27

METAL ACCESSORIES — F Series — P31

LEVELING FEET — L Series — P36

FASTENERS — N Series — P40

CASTERS — C Series — P43

TOOLS — O Series — P46

# T Series

# PIPES

# PIPES

## Coated Pipe

### 1. Production Craft
This craft includs single-step and automatic integrated process.
Because of the high cost of the first craft,RELL suggests the second one. Moreover, we have successfully researched the automatic integrating pipe craft.

### 2. Performance and Parameters
Pipe is composed of five parts.
It can be provided according to customers different requirments on performance.

## Powder Coated Pipe

### 1. Colorful
Wider selection of colors and textures.

### 2. UV light resistance
Can be used in outdoors.

### 3. Non-flammable
No emission of toxic fumes in fire.

### 4. Economical
20% less than coated pipe. 35% less than ESD pipe.30% less than SUS pipe.

### 5. Environmental
Powder coated pipe is fully recyclable. Powder coated pipe of internal and external surface.

## SUS Pipe

### 1. High Strength & Durablity
Surface resistant to light abrasion or contact with metal tools.

### 2. High Oil & Chemical Resistance
High resistance to oil,solvents,bleaches,etc.

### 3. Non-flammable
Inherently non-flammable.

### 4. Conductive
Inherently conductive.

### 5. Environmental
SUS pipe is fully recyclable.

## Galvanized Pipe

### 1. Economical

### 2. UV light & Chemical resistance
High resistance to UV light,oil,solvents,bleaches,etc.

### 3. Non-flammable
Inherently non-flammable.

### 4. Conductive
Inherently conductive.

### 5. Environmental
Galvanized pipe is fully recyclable.

## Aluminum Alloy Pipe

### 1. Environmental
Aluminum pipe achieves a superb recyclability.

### 2. Weight
Weight reduced by 40% comparing with steel coated pipe.

### 3. Aesthetic
Alumite treatment allows for "maintenance-free",excellent appearance that lasts for long.

Unit : mm

| PE Coated Pipe 2440 | | | 28 x 1.0 | | | |
|---|---|---|---|---|---|---|
| Green(N) | | | T-PE10N2440 | | | |
| Blue(U) | | | T-PE10U2440 | | | |
| Red(R) | | | T-PE10R2440 | | | |
| Orange(E) | | | T-PE10E2440 | | | |
| Yellow(Y) | | | T-PE10Y2440 | | | |
| LightYellow(LY) | | | T-PE10LY2440 | | | |
| Ivory(V) | | | T-PE10V2440 | | | |
| Grey(G) | | | T-PE10G2440 | | | |
| Dark Grey(DG) | | | T-PE10DG2440 | | | |
| Black(B) | | | T-PE10B2440 | | | |
| Snow White(SW) | | | T-PE10SW2440 | | | |
| Milky White(MW) | | | T-PE10MW2440 | | | |

| PE Coated Pipe 4000 | 28 x 0.7 | 28 x 0.9 | 28 x 1.0 | 28 x 1.1 | 28 x 1.4 | 28 x 2.0 |
|---|---|---|---|---|---|---|
| Green(N) | T-PE07N | T-PE09N | T-PE10N | T-PE11N | T-PE14N | T-PE20N |
| Blue(U) | T-PE07U | T-PE09U | T-PE10U | T-PE11U | T-PE14U | T-PE20U |
| Red(R) | T-PE07R | T-PE09R | T-PE10R | T-PE11R | T-PE14R | T-PE20R |
| Orange(E) | T-PE07E | T-PE09E | T-PE10E | T-PE11E | T-PE14E | T-PE20E |
| Yellow(Y) | T-PE07Y | T-PE09Y | T-PE10Y | T-PE11Y | T-PE14Y | T-PE20Y |
| LightYellow(LY) | T-PE07LY | T-PE09LY | T-PE10LY | T-PE11LY | T-PE14LY | T-PE20LY |
| Ivory(V) | T-PE07V | T-PE09V | T-PE10V | T-PE11V | T-PE14V | T-PE20V |
| Grey(G) | T-PE07G | T-PE09G | T-PE10G | T-PE11G | T-PE14G | T-PE20G |
| Dark Grey(DG) | T-PE07DG | T-PE09DG | T-PE10DG | T-PE11DG | T-PE14DG | T-PE20DG |
| Black(B) | T-PE07B | T-PE09B | T-PE10B | T-PE11B | T-PE14B | T-PE20B |
| Snow White(SW) | T-PE07SW | T-PE09SW | T-PE10SW | T-PE11SW | T-PE14SW | T-PE20SW |
| Milky White(MW) | T-PE07MW | T-PE09MW | T-PE10MW | T-PE11MW | T-PE14MW | T-PE20MW |

| ABS Coated Pipe 4000 | | | 28 x 1.0 | | | 28 x 2.0 |
|---|---|---|---|---|---|---|
| Green(N) | | | T-ABS10N | | | T-ABS20N |
| Blue(U) | | | T-ABS10U | | | T-ABS20U |
| Red(R) | | | T-ABS10R | | | T-ABS20R |
| Orange(E) | | | T-ABS10E | | | T-ABS20E |
| Yellow(Y) | | | T-ABS10Y | | | T-ABS20Y |
| LightYellow(LY) | | | T-ABS10LY | | | T-ABS20LY |
| Ivory(V) | | | T-ABS10V | | | T-ABS20V |
| Grey(G) | | | T-ABS10G | | | T-ABS20G |
| Dark Grey(DG) | | | T-ABS10DG | | | T-ABS20DG |
| Black(B) | | | T-ABS10B | | | T-ABS20B |
| Snow White(SW) | | | T-ABS10SW | | | T-ABS20SW |
| Milky White(MW) | | | T-ABS10MW | | | T-ABS20MW |

# PIPES

| Powder Coated Pipe 4000 | | | 28 x 1.0 | | | |
|---|---|---|---|---|---|---|
| Green(N) | | | T-PW10N | | | |
| Blue(U) | | | T-PW10U | | | |
| Red(R) | | | T-PW10R | | | |
| Orange(E) | | | T-PW10E | | | |
| Yellow(Y) | | | T-PW10Y | | | |
| LightYellow(LY) | | | T-PW10LY | | | |
| Ivory(V) | | | T-PW10V | | | |
| Grey(G) | | | T-PW10G | | | |
| Dark Grey(DG) | | | T-PW10DG | | | |
| Black(B) | | | T-PW10B | | | |
| Snow White(SW) | | | T-PW10SW | | | |
| Milky White(MW) | | | T-PW10MW | | | |

| ESD Pipe | | | 28 x 1.0 | | | 28 x 2.0 |
|---|---|---|---|---|---|---|
| Black(B) | | | T-ESD10B | | | T-ESD20B |
| Black(B) | | | T-ESD10B2440 | | | |

| Flat Pipe | | | 28 x 1.0 | | | |
|---|---|---|---|---|---|---|
| | | | T-FL10V | | | |
| | | | T-FL10U2440 | | | |

| Slide Pipe | | | 28 x 1.0 | | | |
|---|---|---|---|---|---|---|
| | | | T-SL10V | | | |

| SUS 201 Pipe | 28 x 0.7 | 28 x 0.9 | | 28 x 1.1 | | |
|---|---|---|---|---|---|---|
| | T-SUS07 | T-SUS09 | | T-SUS11 | | |

| STS 409 Pipe | 28 x 0.7 | | | | | |
|---|---|---|---|---|---|---|
| | T-STS07 | | | | | |
| | T-STS072440 | | | | | |

| Galvanized Pipe | | | 28 x 1.0 | | | |
|---|---|---|---|---|---|---|
| | | | T-ZN10 | | | |

| Aluminum Alloy Pipe | | | | | 28 x 1.2 | |
|---|---|---|---|---|---|---|
| | | | | | T-AL12OX | |

# HJ Series

## METAL JOINTS

# METAL JOINTS

SURFACE : ●BK ○WZ ○NP ○CP ●PC

## HJ-1

| | |
|---|---|
| H-1 : 2 pcs | N-1/N-2 : 1 set |

## HJ-1A

| | |
|---|---|
| H-1A : 2 pcs | N-1/N-2 : 1 set |

## HJ-2

| | |
|---|---|
| H-2 : 1 pc | N-1/N-2 : 2 sets |
| H-3 : 1 pc | |

## HJ-3

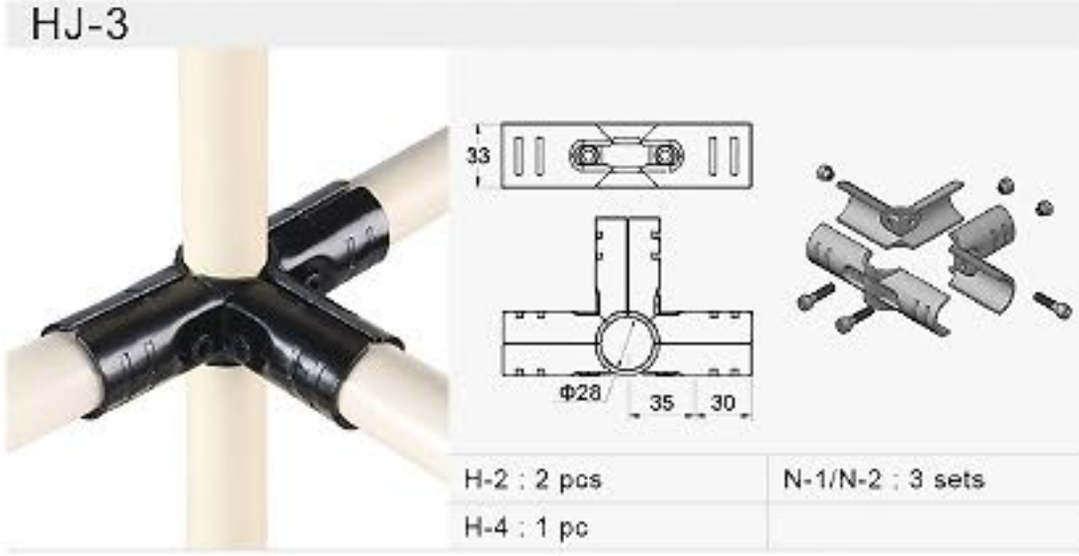


| | |
|---|---|
| H-2 : 2 pcs | N-1/N-2 : 3 sets |
| H-4 : 1 pc | |

## HJ-4

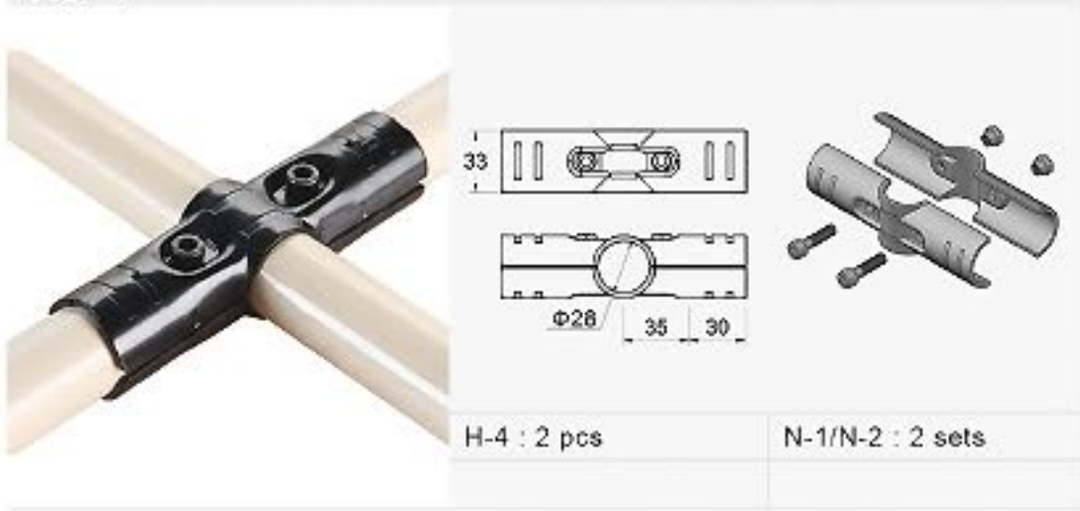


| | |
|---|---|
| H-4 : 2 pcs | N-1/N-2 : 2 sets |

## HJ-5

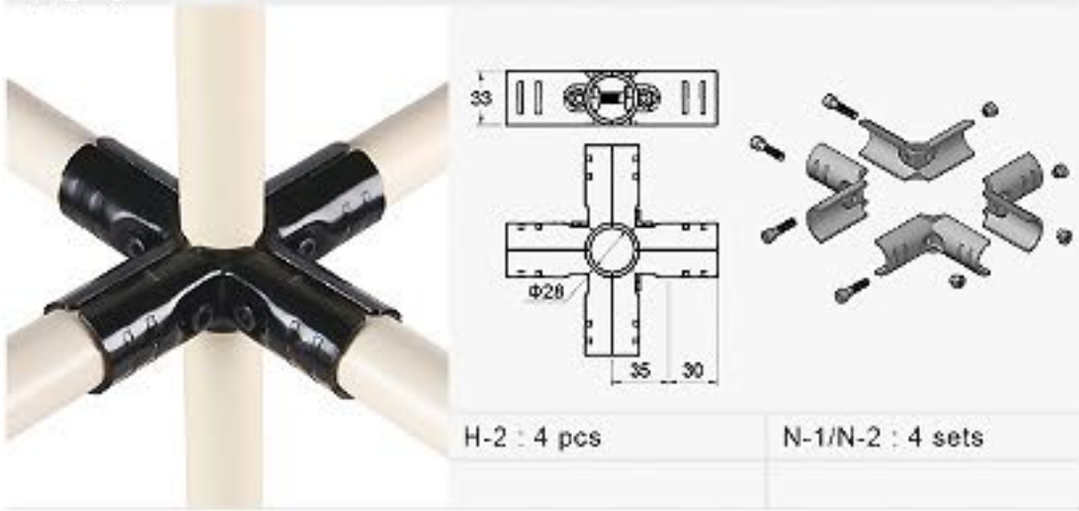


| | |
|---|---|
| H-2 : 4 pcs | N-1/N-2 : 4 sets |

## HJ-6

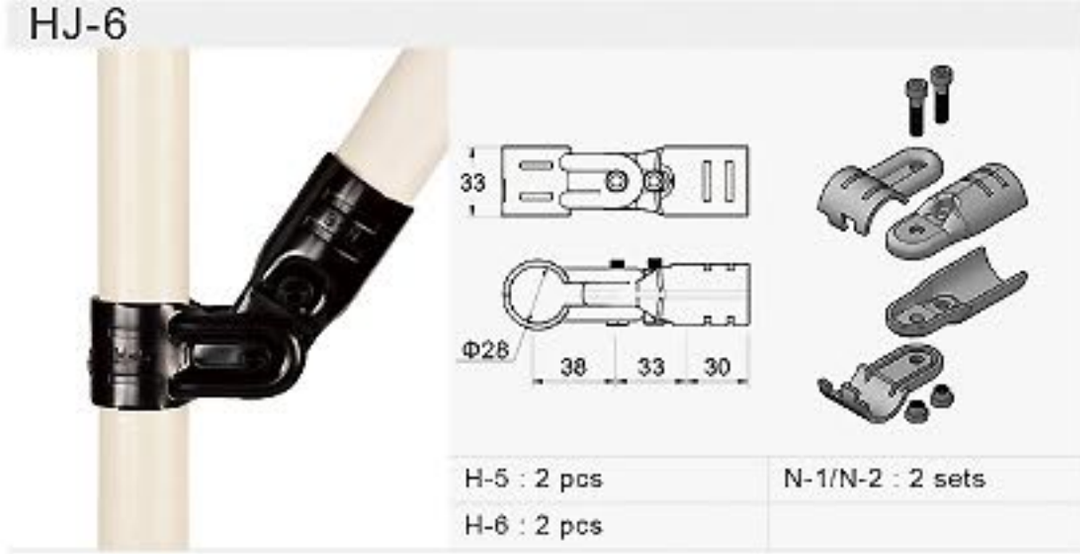


| | |
|---|---|
| H-5 : 2 pcs | N-1/N-2 : 2 sets |
| H-6 : 2 pcs | |

## HJ-6A

| | |
|---|---|
| H-6 : 2 pcs | N-1/N-2 : 3 sets |
| H-6A : 2 pcs | |

## HJ-6B

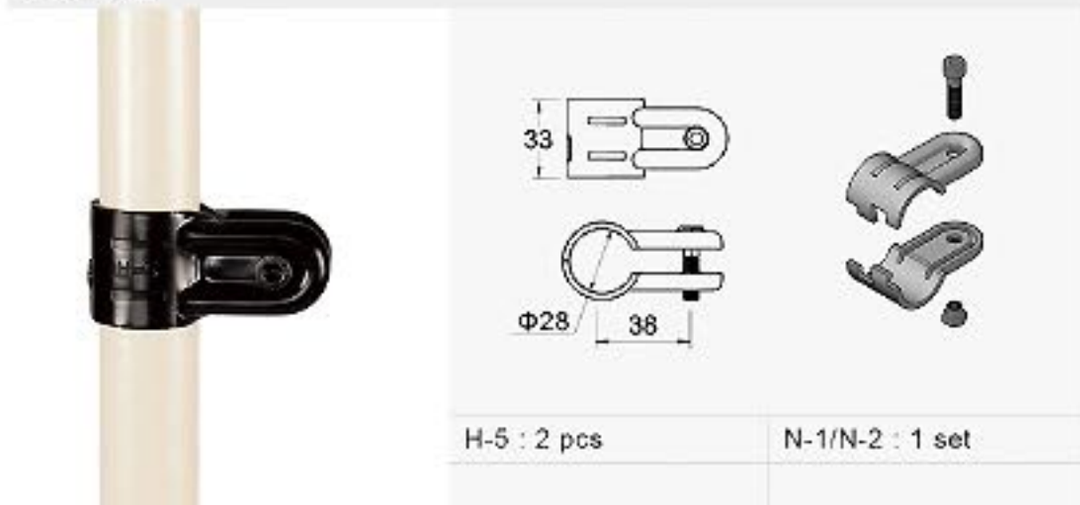


| | |
|---|---|
| H-5 : 2 pcs | N-1/N-2 : 1 set |

## HJ-6C

| | |
|---|---|
| H-6A : 2 pcs | N-1/N-2 : 2 sets |

## HJ-7

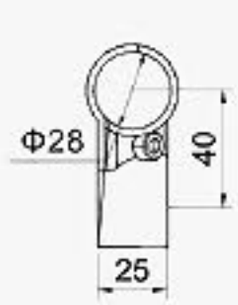

| | |
|---|---|
| H-7 : 2 pcs | N-1/N-2M612 : 1 set |

## HJ-7A

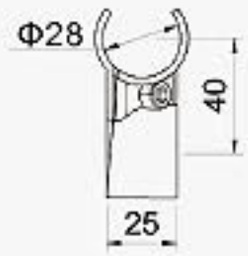

| | |
|---|---|
| H-7A : 2 pcs | N-1/N-2M612 : 1 set |

## HJ-8

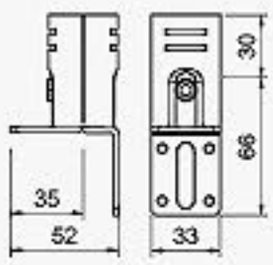

| | |
|---|---|
| H-8 : 1 pc | N-1/N-2 : 1 set |
| H-9 : 1 pc | |

## HJ-9

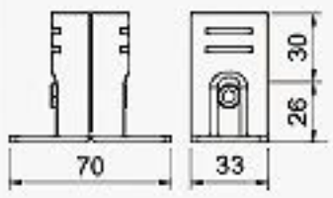

| | |
|---|---|
| H-9 : 2 pcs | N-1/N-2 : 1 set |

## HJ-10

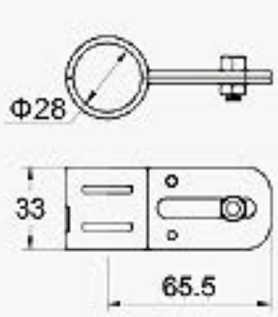

| | |
|---|---|
| H-10 : 2 pcs | N-1/N-2M612 : 1 set |

## HJ-11

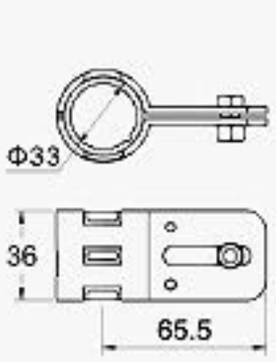

| | |
|---|---|
| H-11 : 2 pcs | N-1/N-2M612 : 1 set |
| P-6 : 1 pc | |

## HJ-12

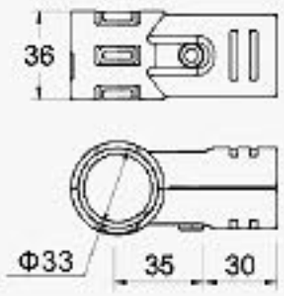

| | |
|---|---|
| H-12 : 2 pcs | N-1/N-2 : 1 set |
| P-6 : 1 pc | |

## HJ-13

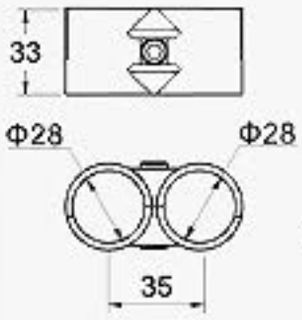


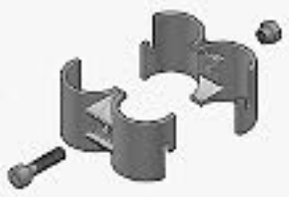

| | |
|---|---|
| H-13 : 2 pcs | N-1/N-2 : 1 set |

## HJ-13A

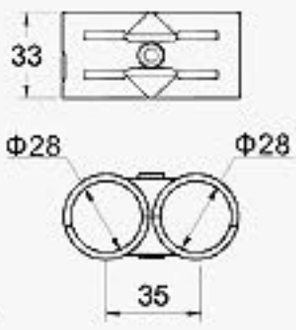

| | |
|---|---|
| H-13A : 2 pcs | N-1/N-2 : 1 set |

## HJ-13B

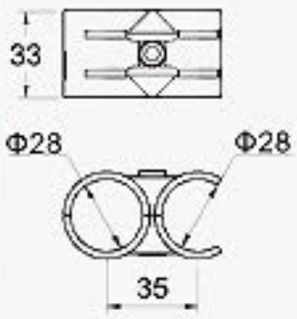


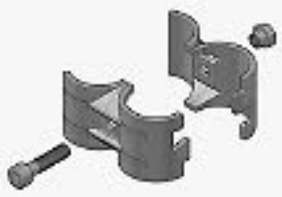

| | |
|---|---|
| H-13B : 2 pcs | N-1/N-2 : 1 set |

# METAL JOINTS

SURFACE : ●BK ○WZ ○NP ○CP ●PC

## HJ-14

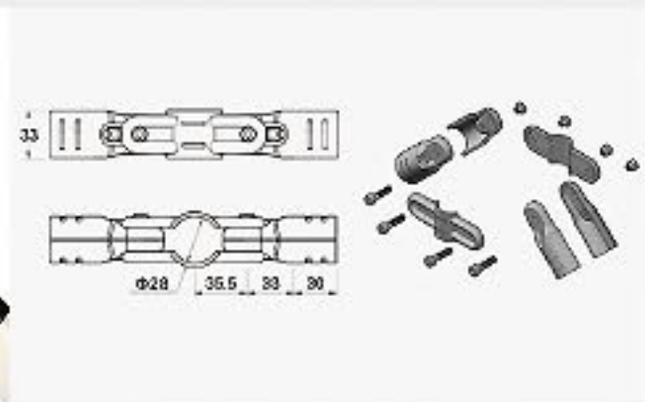


| | |
|---|---|
| H-14 : 2 pcs | N-1/N-2 : 4 sets |
| H-6 : 4 pcs | |

## HJ-14A

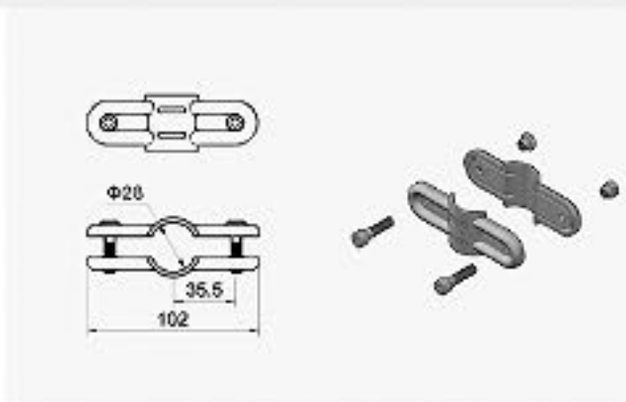


| | |
|---|---|
| H-14 : 2 pcs | N-1/N-2 : 2 sets |

## HJ-15

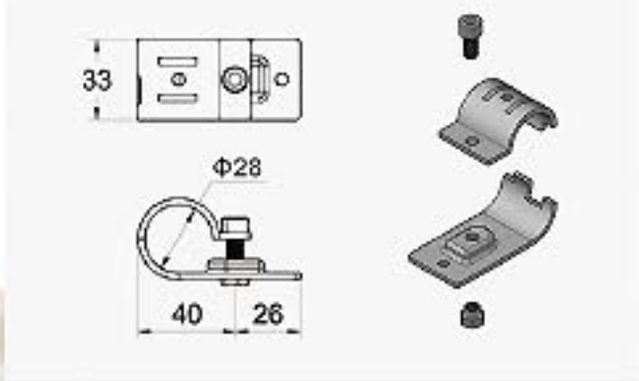


| | |
|---|---|
| H-15 : 1 pc | N-1/N-2 : 1 set |
| H-16 : 1 pc | |

## HJ-15A

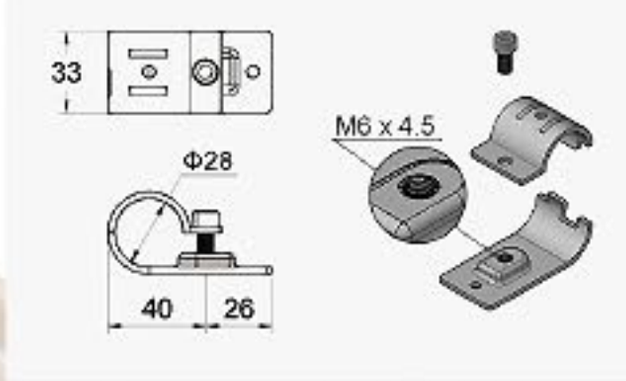


| | |
|---|---|
| H-15 : 1 pc | N-1/N-2 : 1 set |
| H-16A : 1 pc | |

## HJ-17

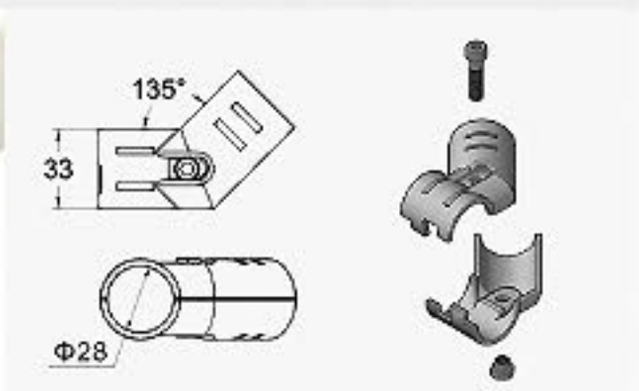


| | |
|---|---|
| H-17 : 1 pc | N-1/N-2 : 1 set |
| H-18 : 1 pc | |

## HJ-19

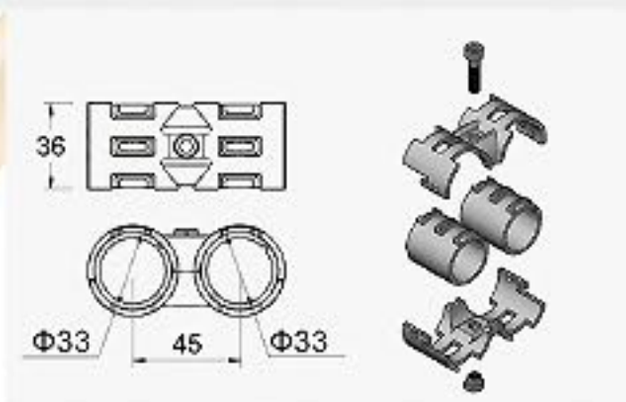


| | |
|---|---|
| H-19 : 2 pcs | N-1/N-2 : 1 set |
| P-6 : 2 pcs | |

## HJ-20

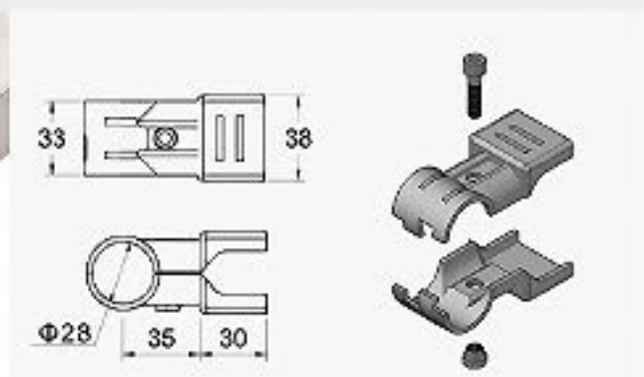


| | |
|---|---|
| H-20 : 2 pcs | N-1/N-2 : 1 set |

## HJ-20A

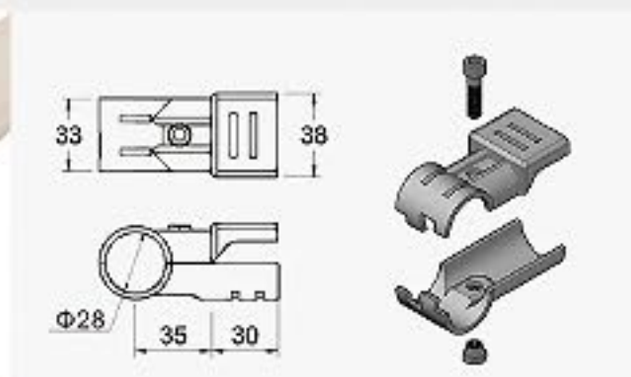


| | |
|---|---|
| H-20 : 1 pc | N-1/N-2: 1 set |
| H-1 : 1 pc | |

## HJ-21

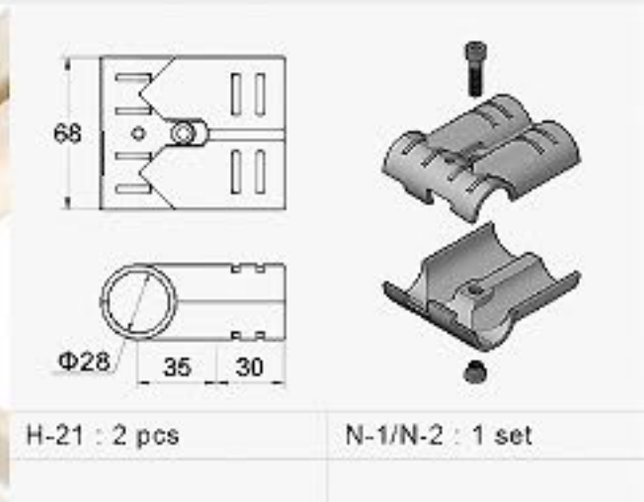


| | |
|---|---|
| H-21 : 2 pcs | N-1/N-2 : 1 set |

## HJ-23

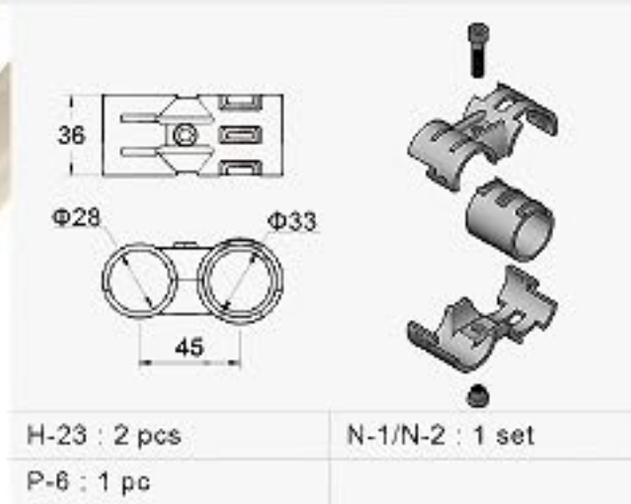


| | |
|---|---|
| H-23 : 2 pcs | N-1/N-2 : 1 set |
| P-6 : 1 pc | |

## HJ-24

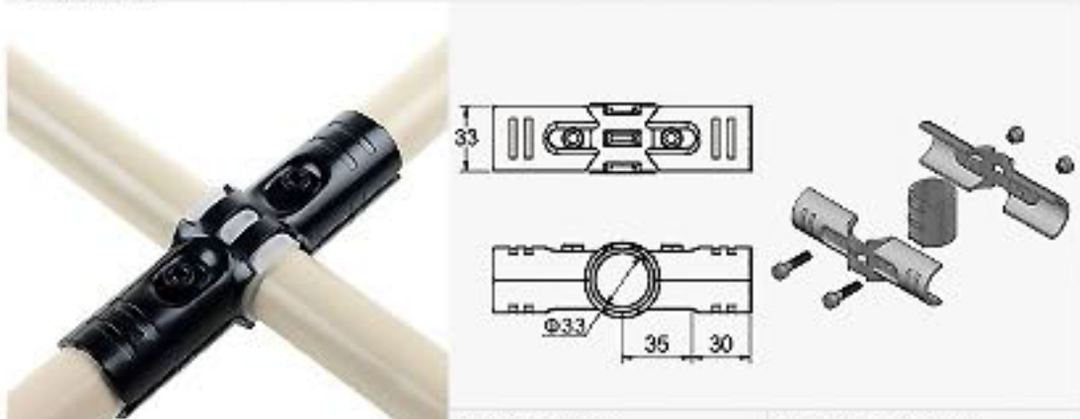


| | |
|---|---|
| H-24 : 2 pcs | N-1/N-2 : 2 sets |
| P-6 : 1 pc | |

## HJ-30

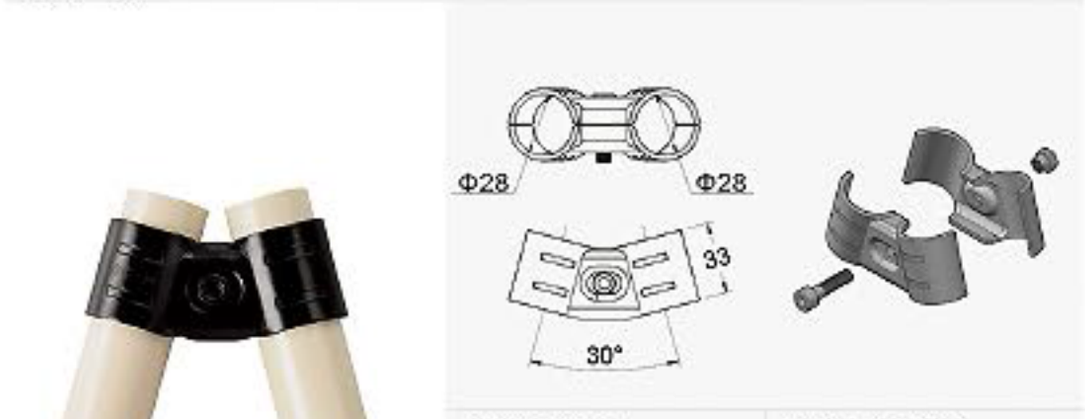


| | |
|---|---|
| H-30 : 2 pcs | N-1/N-2 : 1 set |

## HJ-45

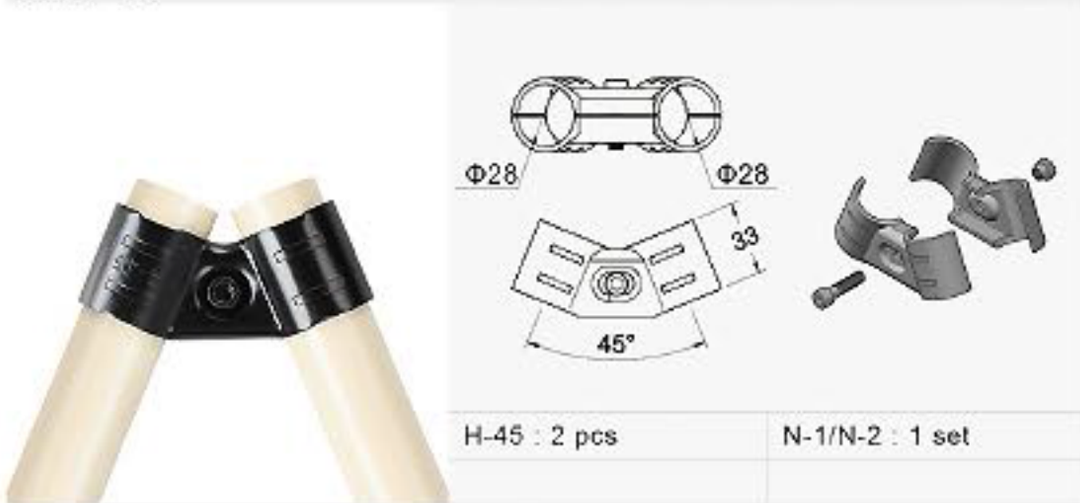


| | |
|---|---|
| H-45 : 2 pcs | N-1/N-2 : 1 set |

## HJ-60

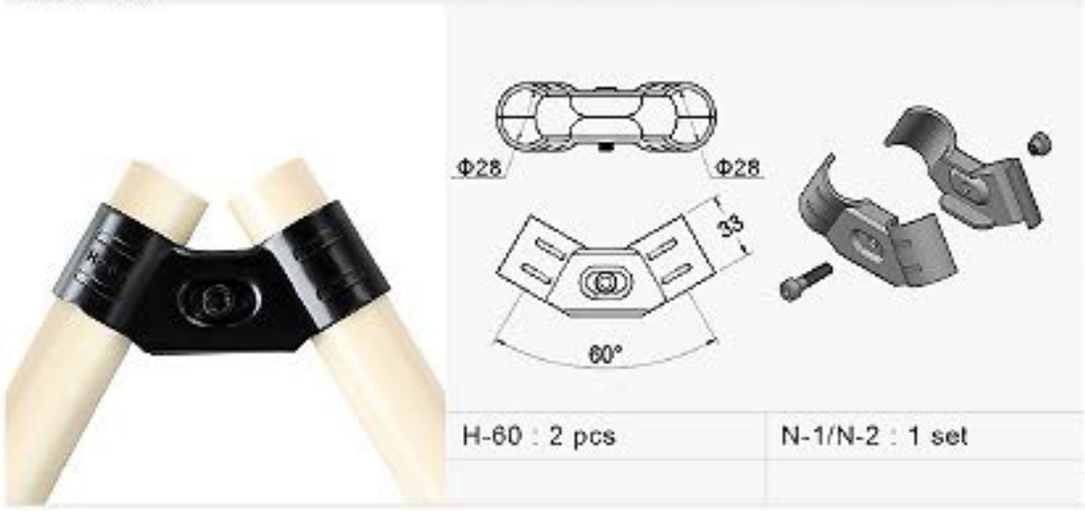


| | |
|---|---|
| H-60 : 2 pcs | N-1/N-2 : 1 set |

## HJ-90

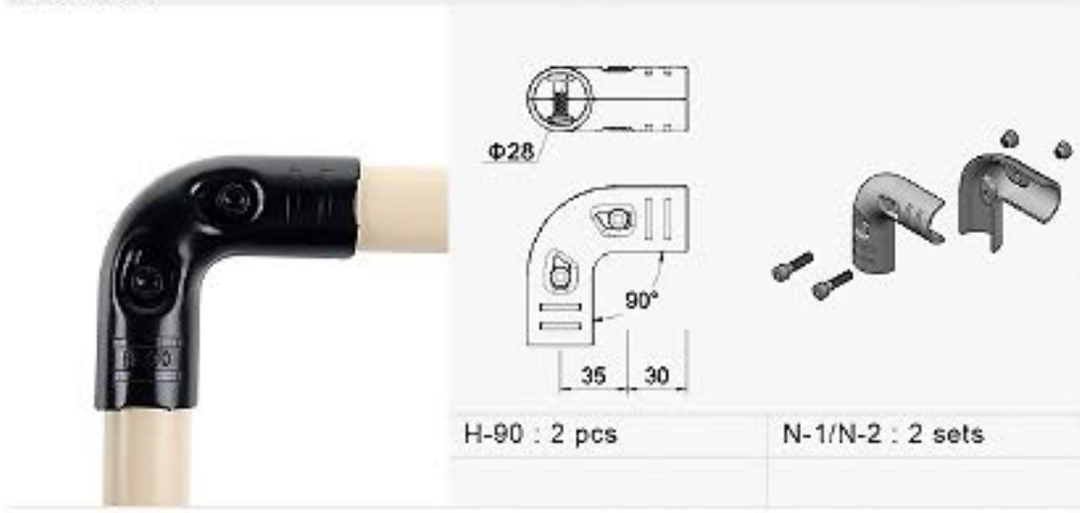


| | |
|---|---|
| H-90 : 2 pcs | N-1/N-2 : 2 sets |

## HJ-110

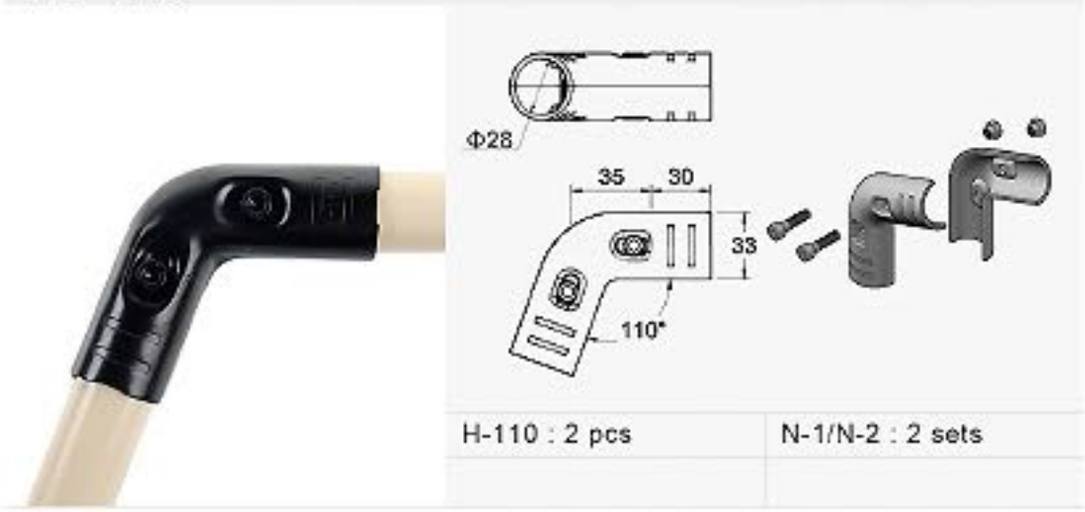


| | |
|---|---|
| H-110 : 2 pcs | N-1/N-2 : 2 sets |

## HJ-160

| | |
|---|---|
| H-160 : 2 pcs | N-1/N-2 : 2 sets |

## HJ-180

| | |
|---|---|
| H-180 : 2 pcs | N-1/N-2 : 1 set |

## METAL JOINTS（Φ33）

SURFACE : ●BK ○WZ ○NP ○CP ●PC

### HJ-103

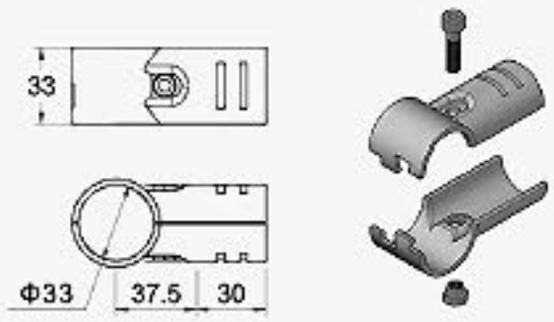


H-103 : 2 pcs | N-1/N-2 : 1 set

### HJ-403

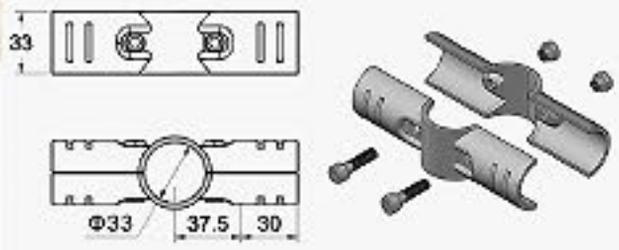


H-403 : 2 pcs | N-1/N-2 : 2 sets

### HJ-13C

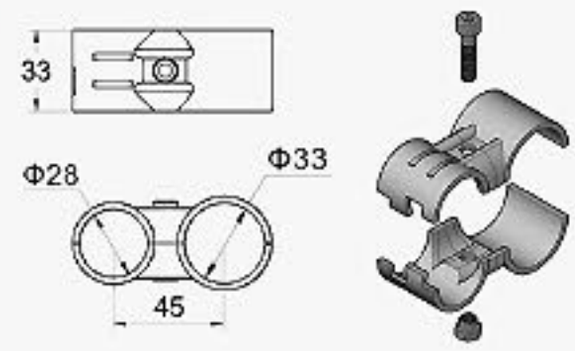


H-13C : 2 pcs | N-1/N-2 : 1 set

### HJ-13D

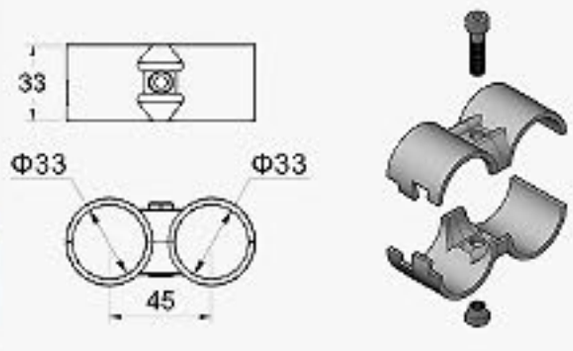


H-13D : 2 pcs | N-1/N-2 : 1 set

## METAL JOINTS （Φ28.6）

### HJ-101

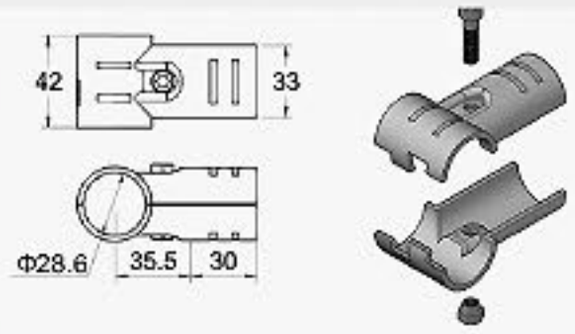


H-101 : 2 pcs | N-1/N-2 : 1 set

### HJ-102

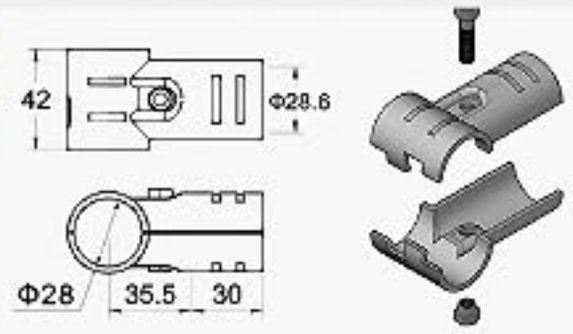


H-102 : 2 pcs | N-1/N-2 : 1 set

### HJ-201

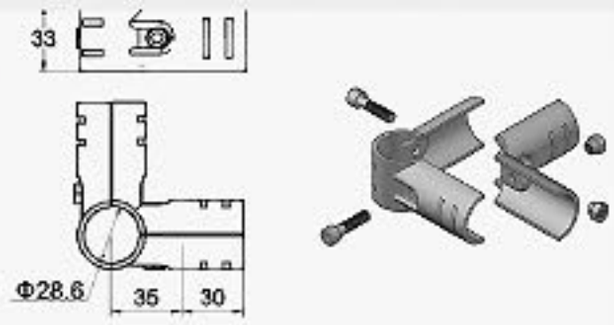


H-301 : 1 pc | N-1/N-2 : 2 sets
H-2 : 1 pc

### HJ-301

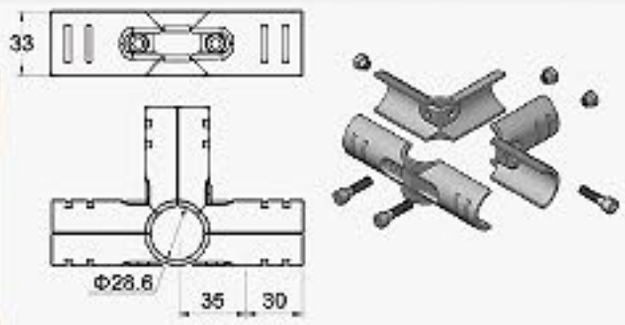


H-401 : 1 pc | N-1/N-2 : 3 sets
H-2 : 2 pcs

### HJ-401

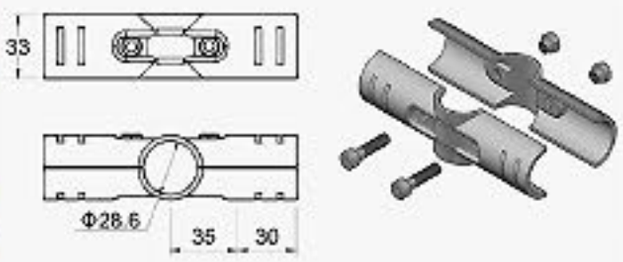


H-401 : 2 pcs | N-1/N-2 : 2 sets

# H Series

## METAL JOINTS

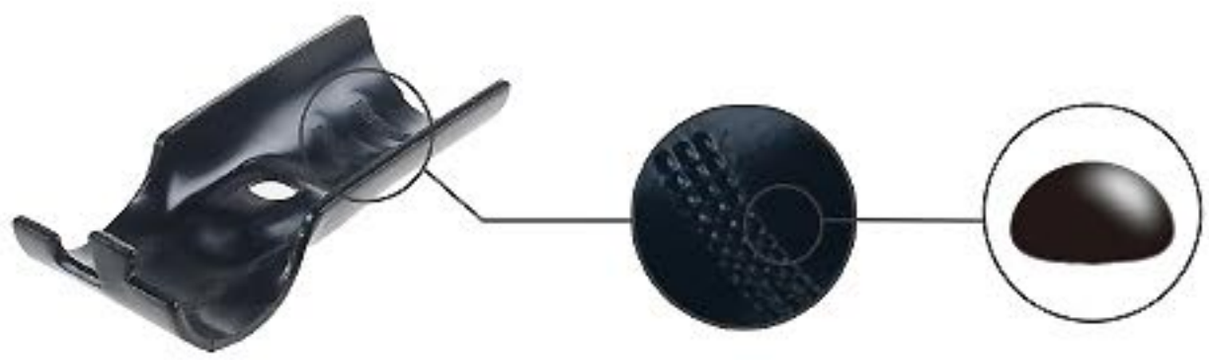

# METAL JOINTS

SURFACE : ●BK ○WZ ○NP ○CP ●PC

## H-1

| | |
|---|---|
| Kg/PC | 0.067 |
| PC/CTN | 300 |

## H-1A

| | |
|---|---|
| Kg/PC | 0.058 |
| PC/CTN | 360 |

## H-2

| | |
|---|---|
| Kg/PC | 0.094 |
| PC/CTN | 200 |

## H-3 (Ungrip Type)

| | |
|---|---|
| Kg/PC | 0.120 |
| PC/CTN | 80 |

## H-3K (Grip Type)

| | |
|---|---|
| Kg/PC | 0.120 |
| PC/CTN | 80 |

## H-4

| | |
|---|---|
| Kg/PC | 0.106 |
| PC/CTN | 200 |

## H-5

| | |
|---|---|
| Kg/PC | 0.045 |
| PC/CTN | 300 |

## H-6

| | |
|---|---|
| Kg/PC | 0.059 |
| PC/CTN | 300 |

## H-6A

| | |
|---|---|
| Kg/PC | 0.066 |
| PC/CTN | 240 |

## H-7

| | |
|---|---|
| Kg/PC | 0.048 |
| PC/CTN | 200 |

## H-7A

| | |
|---|---|
| Kg/PC | 0.040 |
| PC/CTN | 300 |

## H-8

| | |
|---|---|
| Kg/PC | 0.067 |
| PC/CTN | 240 |

## H-9

| | |
|---|---|
| Kg/PC | 0.062 |
| PC/CTN | 330 |

## H-10

| | |
|---|---|
| Kg/PC | 0.054 |
| PC/CTN | 300 |

## H-11

| | |
|---|---|
| Kg/PC | 0.060 |
| PC/CTN | 280 |

## H-12

| | |
|---|---|
| Kg/PC | 0.063 |
| PC/CTN | 240 |

## H-13

| | |
|---|---|
| Kg/PC | 0.053 |
| PC/CTN | 300 |

## H-13A

| | |
|---|---|
| Kg/PC | 0.052 |
| PC/CTN | 330 |

## H-13B

| | |
|---|---|
| Kg/PC | 0.044 |
| PC/CTN | 540 |

## H-14

| | |
|---|---|
| Kg/PC | 0.056 |
| PC/CTN | 320 |

## H-15

| | |
|---|---|
| Kg/PC | 0.038 |
| PC/CTN | 400 |

## H-16

| | |
|---|---|
| Kg/PC | 0.046 |
| PC/CTN | 400 |

## H-16A

| | |
|---|---|
| Kg/PC | 0.046 |
| PC/CTN | 400 |

## H-17

| | |
|---|---|
| Kg/PC | 0.069 |
| PC/CTN | 220 |

## H-18

| | |
|---|---|
| Kg/PC | 0.069 |
| PC/CTN | 220 |

## H-19

| | |
|---|---|
| Kg/PC | 0.062 |
| PC/CTN | 150 |

## H-20

| | |
|---|---|
| Kg/PC | 0.070 |
| PC/CTN | 200 |

## H-21

| | |
|---|---|
| Kg/PC | 0.133 |
| PC/CTN | 150 |

## H-23

| | |
|---|---|
| Kg/PC | 0.064 |
| PC/CTN | 180 |

## H-24

| | |
|---|---|
| Kg/PC | 0.102 |
| PC/CTN | 200 |

## H-30

| | |
|---|---|
| Kg/PC | 0.082 |
| PC/CTN | 330 |

## H-45

| | |
|---|---|
| Kg/PC | 0.066 |
| PC/CTN | 230 |

## H-60

| | |
|---|---|
| Kg/PC | 0.083 |
| PC/CTN | 150 |

## H-90

| | |
|---|---|
| Kg/PC | 0.102 |
| PC/CTN | 150 |

## H-110

| | |
|---|---|
| Kg/PC | 0.113 |
| PC/CTN | 150 |

## H-160

| | |
|---|---|
| Kg/PC | 0.114 |
| PC/CTN | 160 |

## H-180

| | |
|---|---|
| Kg/PC | 0.071 |
| PC/CTN | 300 |

## METAL JOINTS（Φ33）

SURFACE : ●BK ○WZ ○NP ○CP ●PC

### H-103

| | |
|---|---|
| Kg/PC | 0.073 |
| PC/CTN | 240 |

### H-403

| | |
|---|---|
| Kg/PC | 0.106 |
| PC/CTN | 200 |

### H-13C

| | |
|---|---|
| Kg/PC | 0.069 |
| PC/CTN | 180 |

### H-13D

| | |
|---|---|
| Kg/PC | 0.068 |
| PC/CTN | 180 |

## METAL JOINTS（Φ28.6）

### H-101

| | |
|---|---|
| Kg/PC | 0.078 |
| PC/CTN | 200 |

### H-102

| | |
|---|---|
| Kg/PC | 0.078 |
| PC/CTN | 200 |

### H-301

| | |
|---|---|
| Kg/PC | 0.120 |
| PC/CTN | 80 |

### H-401

| | |
|---|---|
| Kg/PC | 0.108 |
| PC/CTN | 200 |

## METAL JOINTS（T 2.3）

### H-1

| | |
|---|---|
| Kg/PC | 0.061 |
| PC/CTN | 300 |

### H-2

| | |
|---|---|
| Kg/PC | 0.086 |
| PC/CTN | 200 |

### H-3（Ungrip Type）

| | |
|---|---|
| Kg/PC | 0.111 |
| PC/CTN | 80 |

### H-4

| | |
|---|---|
| Kg/PC | 0.098 |
| PC/CTN | 200 |

### H-5

| | |
|---|---|
| Kg/PC | 0.042 |
| PC/CTN | 300 |

### H-6

| | |
|---|---|
| Kg/PC | 0.055 |
| PC/CTN | 300 |

### H-13A

| | |
|---|---|
| Kg/PC | 0.050 |
| PC/CTN | 330 |

### H-15

| | |
|---|---|
| Kg/PC | 0.032 |
| PC/CTN | 400 |

### H-16

| | |
|---|---|
| Kg/PC | 0.042 |
| PC/CTN | 400 |

### H-17

| | |
|---|---|
| Kg/PC | 0.065 |
| PC/CTN | 220 |

### H-18

| | |
|---|---|
| Kg/PC | 0.065 |
| PC/CTN | 220 |

### H-90

| | |
|---|---|
| Kg/PC | 0.095 |
| PC/CTN | 150 |

# R Series

# ROLLER TRACKS

R-40 36

Shaft Distance

Roller Track Width

# ROLLER TRACKS

## R-3533

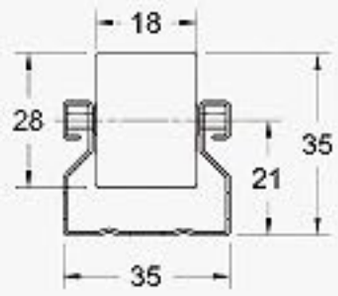


| | |
|---|---|
| Kg/m | 0.810 |
| m/PC | 4 |
| m/BDL. | 40 |

## R-4036

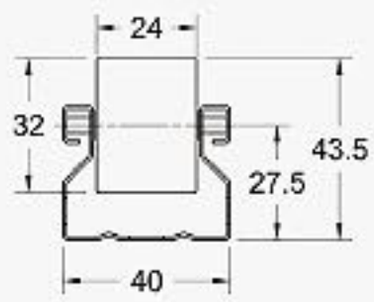


| | |
|---|---|
| Kg/m | 1.100 |
| m/PC | 4 |
| m/BDL. | 40 |

## R-S4036

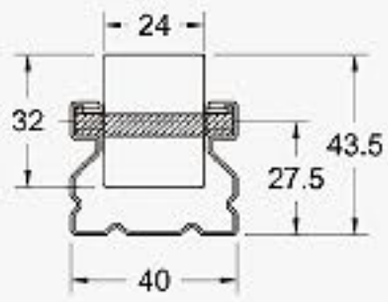


| | |
|---|---|
| Kg/m | 1.100 |
| m/PC | 4 |
| m/BDL. | 40 |

## R-4036A

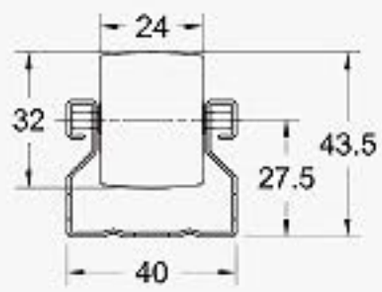


| | |
|---|---|
| Kg/m | 1.100 |
| m/PC | 4 |
| m/BDL. | 40 |

## R-S4036A

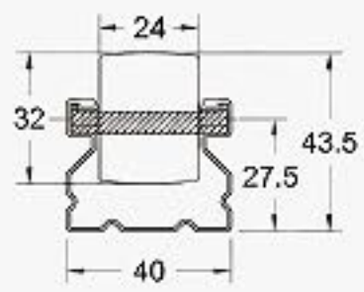


| | |
|---|---|
| Kg/m | 1.100 |
| m/PC | 4 |
| m/BDL. | 40 |

## R-4045A

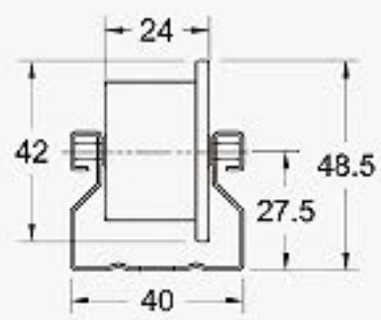


| | |
|---|---|
| Kg/m | 1.100 |
| m/PC | 4 |
| m/BDL. | 40 |

## R-6016

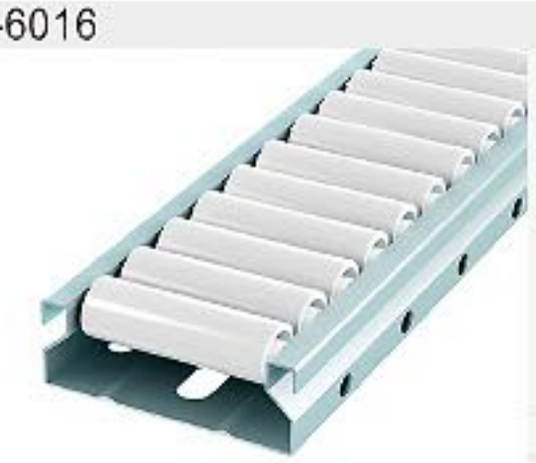

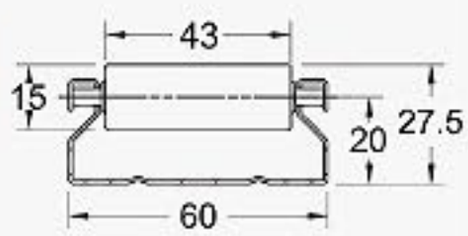


| | |
|---|---|
| Kg/m | 1.350 |
| m/PC | 4 |
| m/BDL. | 28 |

## R-8040

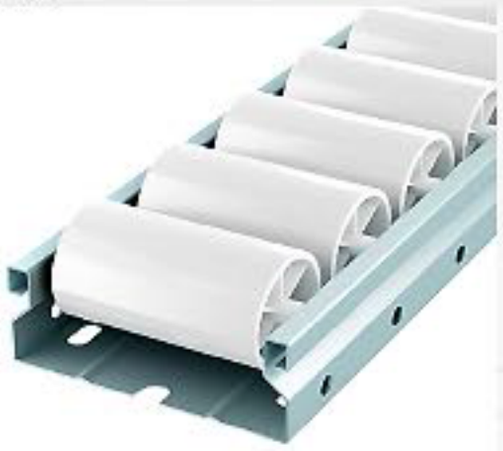

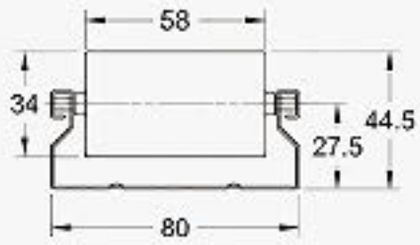


| | |
|---|---|
| Kg/m | 2.380 |
| m/PC | 4 |
| m/BDL. | 20 |

## R-S8040

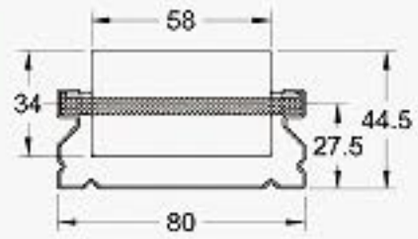


| | |
|---|---|
| Kg/m | 2.380 |
| m/PC | 4 |
| m/BDL. | 20 |

## R-8519

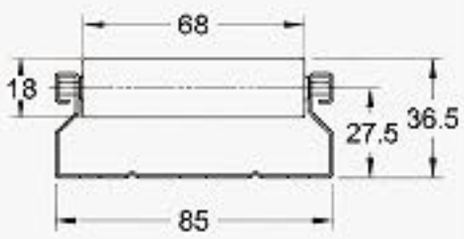


| | |
|---|---|
| Kg/m | 2.380 |
| m/PC | 4 |
| m/BDL. | 20 |

## R-S8520

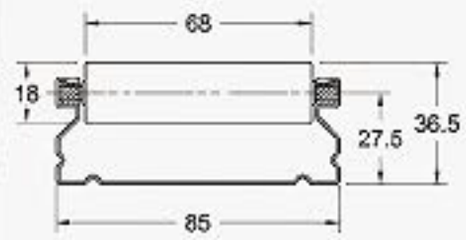


| | |
|---|---|
| Kg/m | 2.380 |
| m/PC | 4 |
| m/BDL. | 20 |

## R-8550

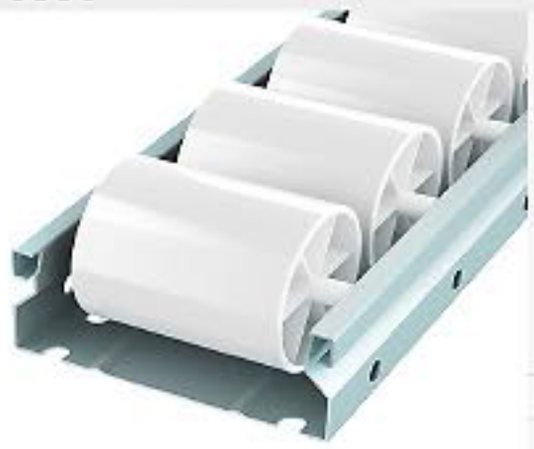

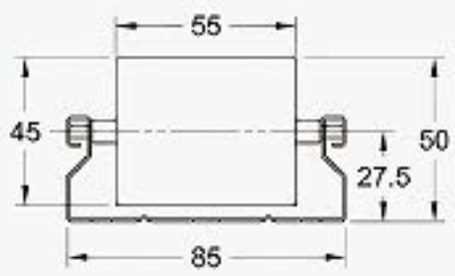


| | |
|---|---|
| Kg/m | 2.380 |
| m/PC | 4 |
| m/BDL. | 20 |

## ROLLER TRACKS （R-28H）

SURFACE : ○ WZ

### R-28H1

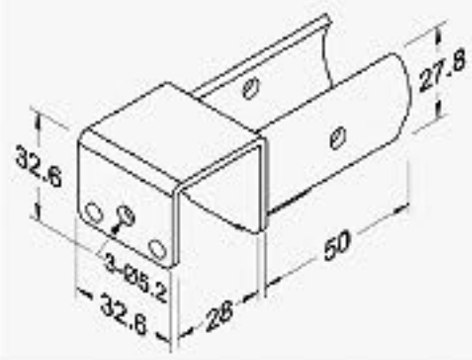


| | |
|---|---|
| Kg/PC | 0.128 |
| PC/CTN | 95 |

### R-28H2

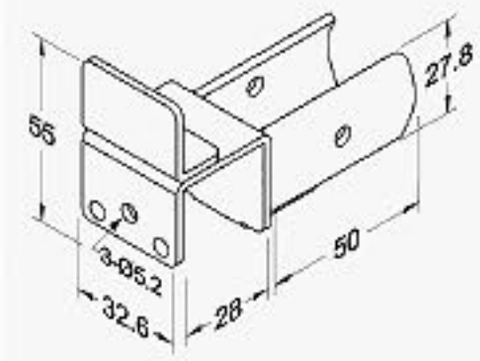


| | |
|---|---|
| Kg/PC | 0.150 |
| PC/CTN | 85 |

### R-28H3

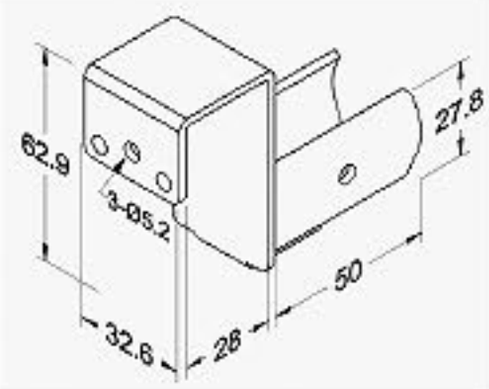


| | |
|---|---|
| Kg/PC | 0.153 |
| PC/CTN | 80 |

### R-28H4B

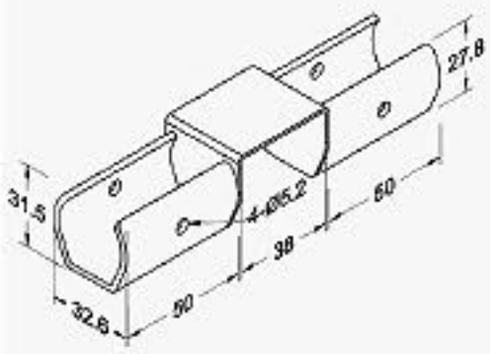


| | |
|---|---|
| Kg/PC | 0.171 |
| PC/CTN | 50 |

### R-28H5

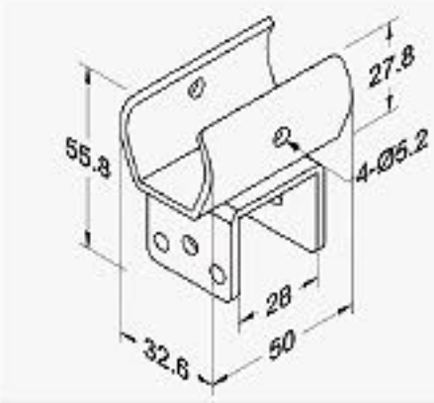


| | |
|---|---|
| Kg/PC | 0.112 |
| PC/CTN | 110 |

### R-28H5B

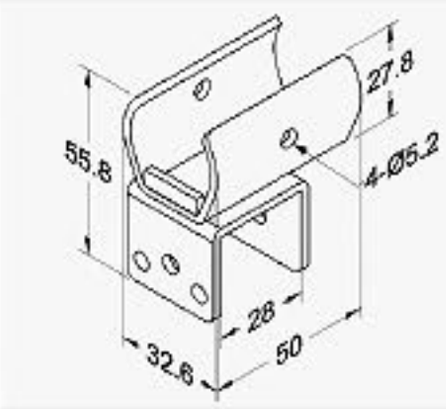


| | |
|---|---|
| Kg/PC | 0.117 |
| PC/CTN | 110 |

## ROLLER TRACKS （R-35H）

### R-35H1

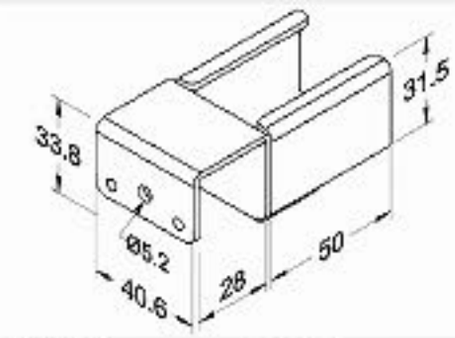


| | |
|---|---|
| Kg/PC | 0.167 |
| PC/CTN | 70 |

### R-35H2

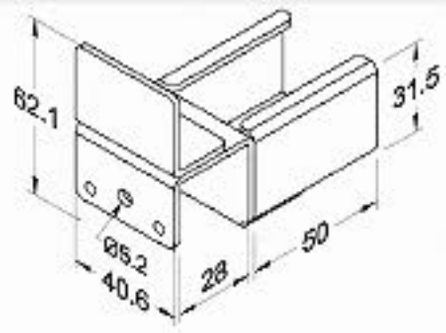


| | |
|---|---|
| Kg/PC | 0.211 |
| PC/CTN | 45 |

### R-35H3A

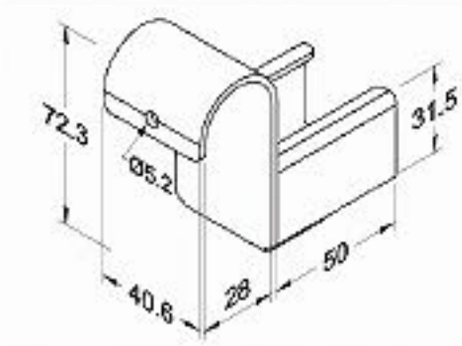


| | |
|---|---|
| Kg/PC | 0.191 |
| PC/CTN | 55 |

### R-35H5

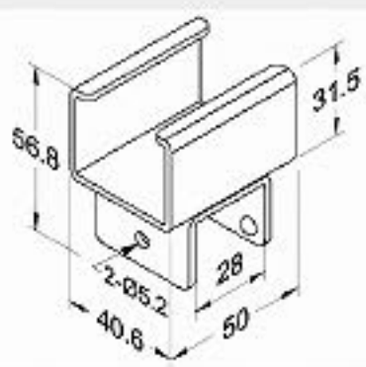


| | |
|---|---|
| Kg/PC | 0.137 |
| PC/CTN | 90 |

# ROLLER TRACKS （R-40H）

## R-40BH1

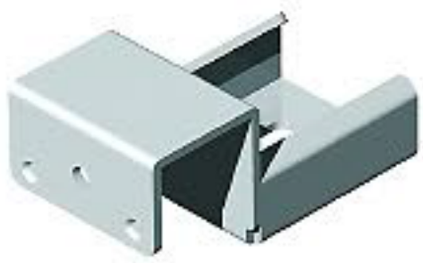

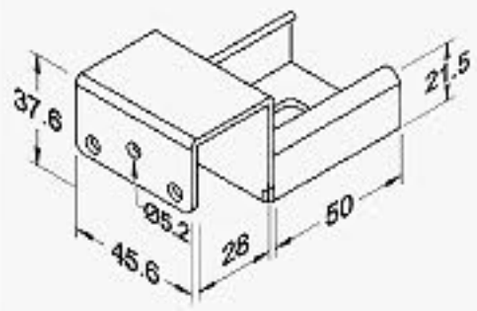


| | |
|---|---|
| Kg/PC | 0.141 |
| PC/CTN | 65 |

## R-40BH2

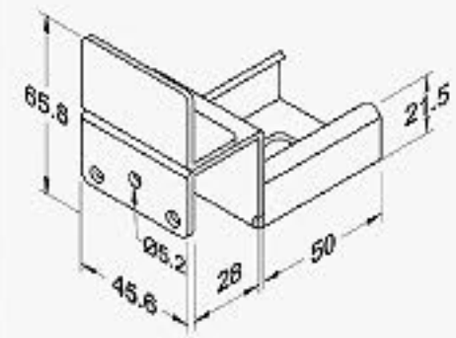


| | |
|---|---|
| Kg/PC | 0.193 |
| PC/CTN | 45 |

## R-40BH3

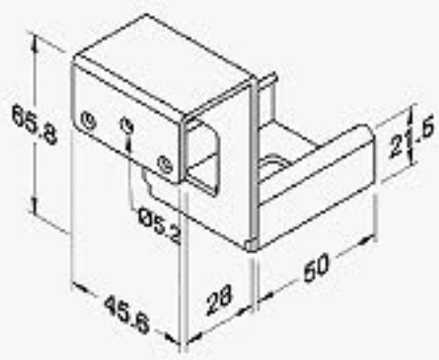


| | |
|---|---|
| Kg/PC | 0.167 |
| PC/CTN | 60 |

## R-40BH4

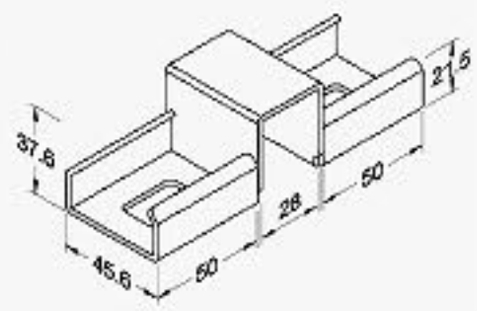


| | |
|---|---|
| Kg/PC | 0.270 |
| PC/CTN | 35 |

## R-40BH5

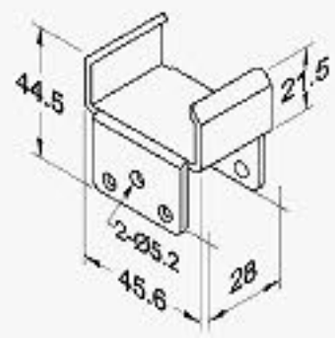


| | |
|---|---|
| Kg/PC | 0.120 |
| PC/CTN | 100 |

## R-40BH6

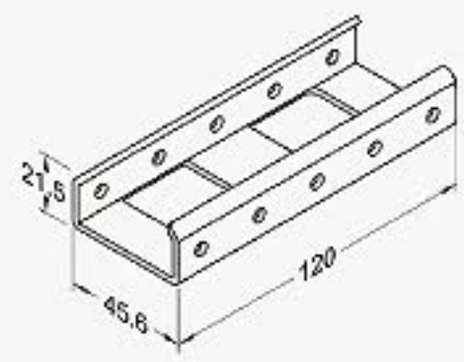


| | |
|---|---|
| Kg/PC | 0.180 |
| PC/CTN | 85 |

## R-40BH6A

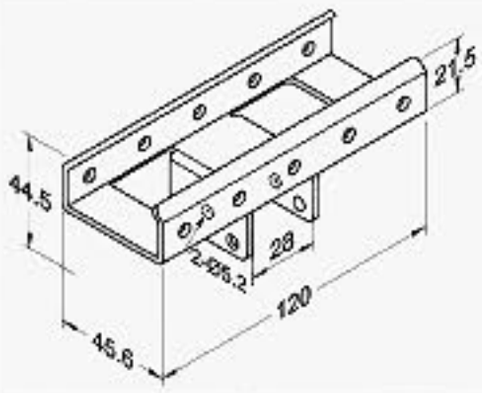


| | |
|---|---|
| Kg/PC | 0.230 |
| PC/CTN | 40 |

## R-40BH31

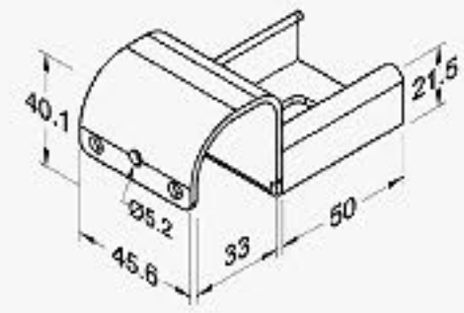


| | |
|---|---|
| Kg/PC | 0.180 |
| PC/CTN | 85 |

## R-40BH33

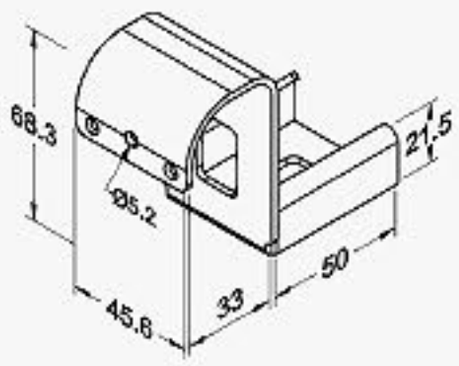


| | |
|---|---|
| Kg/PC | 0.230 |
| PC/CTN | 40 |

## ROLLER TRACKS （R-40H）

SURFACE : WZ

### R-40H1

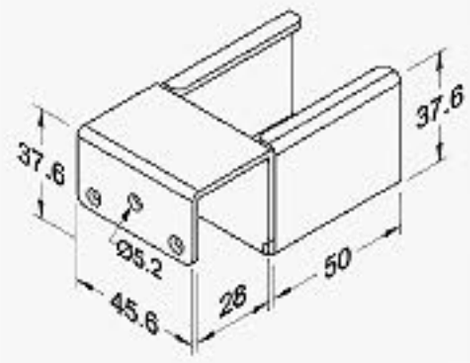


| | |
|---|---|
| Kg/PC | 0.182 |
| PC/CTN | 45 |

### R-40H2

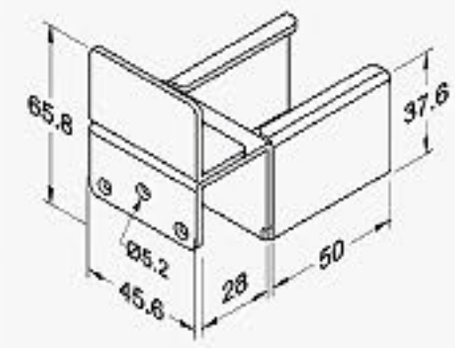


| | |
|---|---|
| Kg/PC | 0.234 |
| PC/CTN | 45 |

### R-40H3

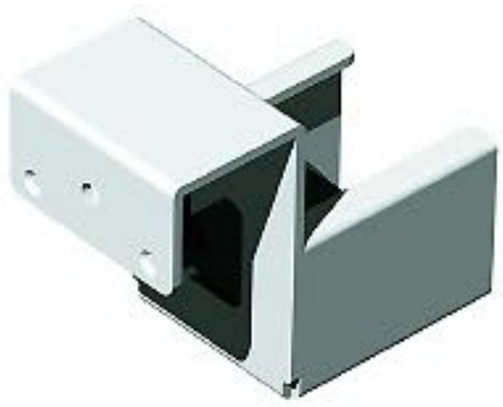

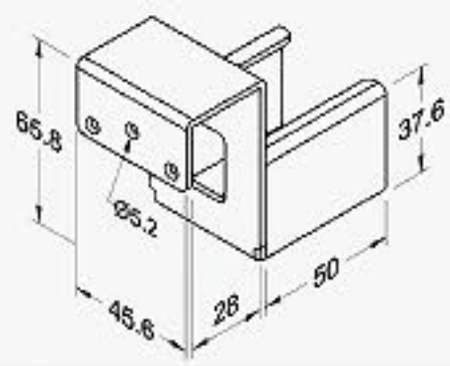


| | |
|---|---|
| Kg/PC | 0.208 |
| PC/CTN | 40 |

### R-40H6

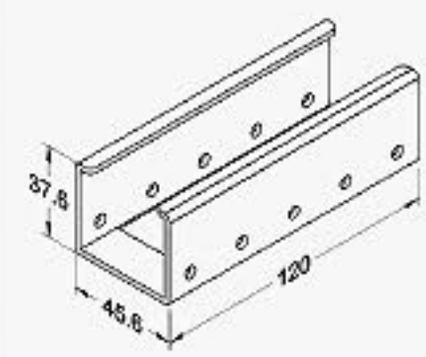


| | |
|---|---|
| Kg/PC | 0.272 |
| PC/CTN | 50 |

### R-40H6A

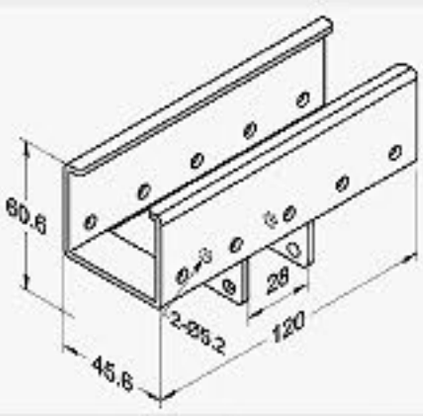


| | |
|---|---|
| Kg/PC | 0.320 |
| PC/CTN | 20 |

## ROLLER TRACKS （RP-40）

### RP-40A

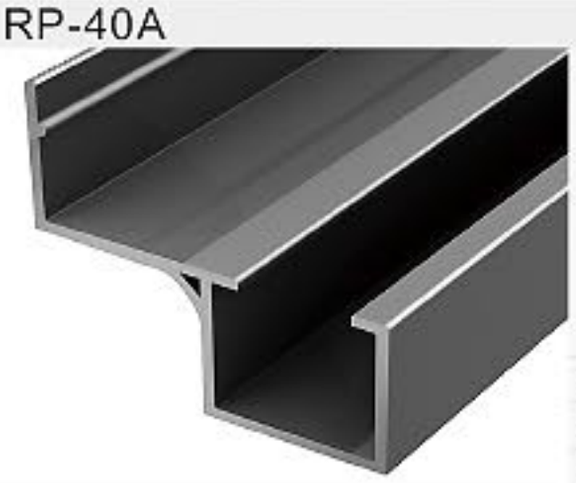

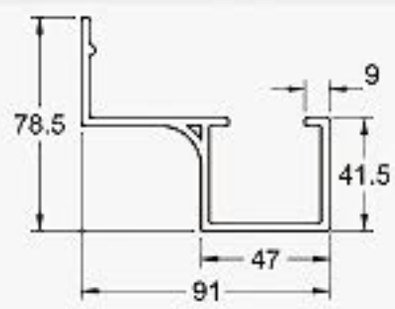


| | |
|---|---|
| Kg/m | 0.980 |
| m/PC | 4 |
| m/BDL. | 40 |

### RP-40B

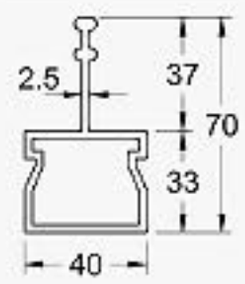


| | |
|---|---|
| Kg/m | 0.660 |
| m/PC | 4 |
| m/BDL. | 40 |

### RP-40C

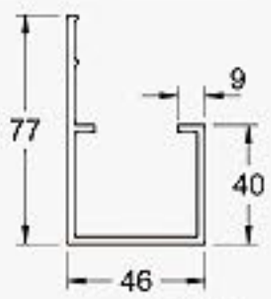


| | |
|---|---|
| Kg/m | 0.980 |
| m/PC | 4 |
| m/BDL. | 40 |

# ROLLER TRACKS （ODM）

## R-40BH2B

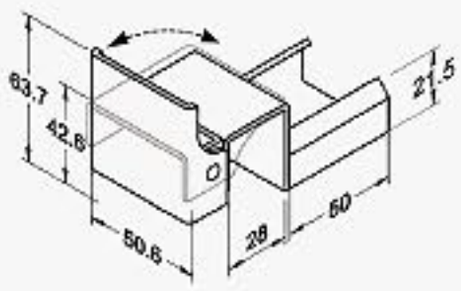


| | |
|---|---|
| Kg/PC | 0.167 |
| PC/CTN | 50 |

## R-40BH4A

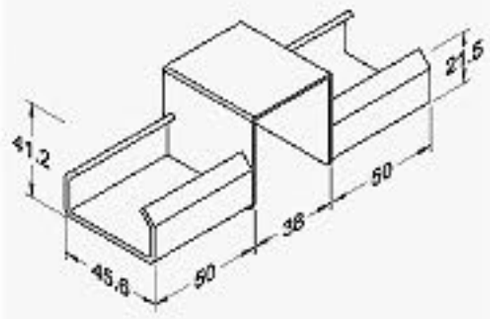


| | |
|---|---|
| Kg/PC | 0.213 |
| PC/CTN | 30 |

## R-40BH4B

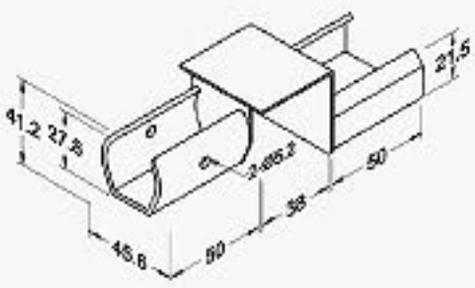


| | |
|---|---|
| Kg/PC | 0.190 |
| PC/CTN | 40 |

## R-40H2A

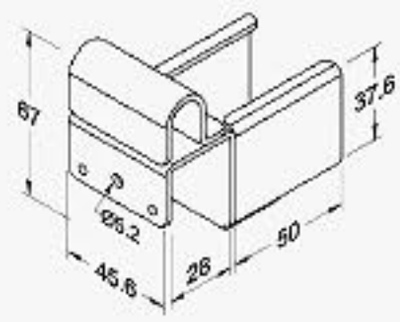


| | |
|---|---|
| Kg/PC | 0.234 |
| PC/CTN | 45 |

## R-40H4A

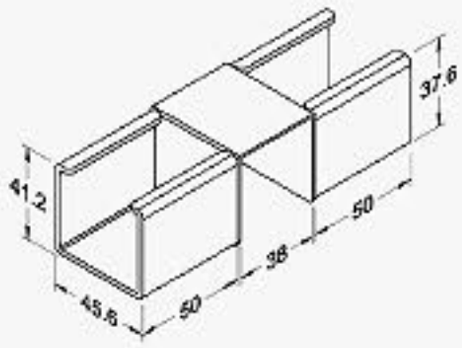


| | |
|---|---|
| Kg/PC | 0.290 |
| PC/CTN | 25 |

## R-4040H1

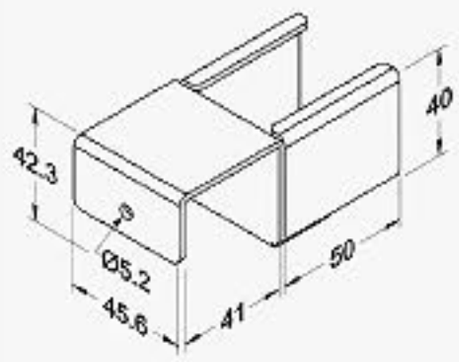


| | |
|---|---|
| Kg/PC | 0.220 |
| PC/CTN | 45 |

## R-4040H3

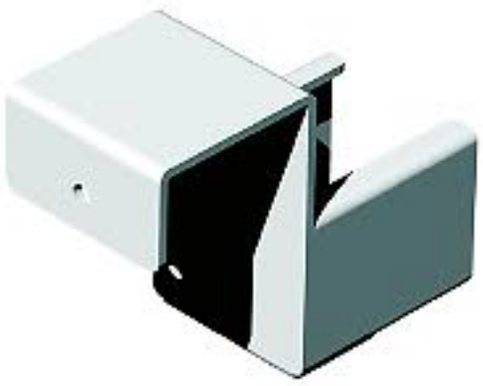

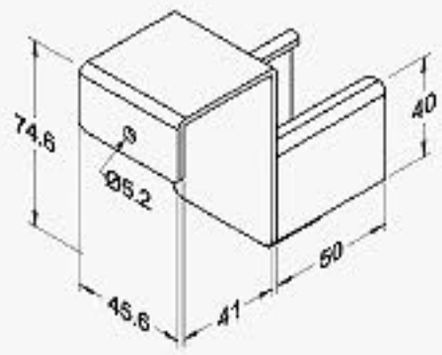


| | |
|---|---|
| Kg/PC | 0.250 |
| PC/CTN | 35 |

## R-44H1

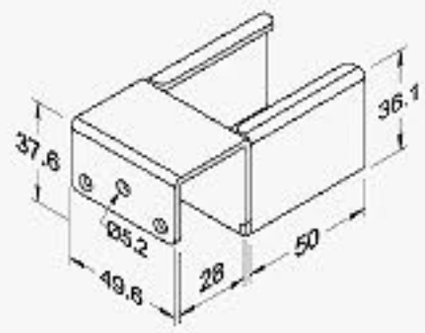


| | |
|---|---|
| Kg/PC | 0.186 |
| PC/CTN | 40 |

## R-44H3

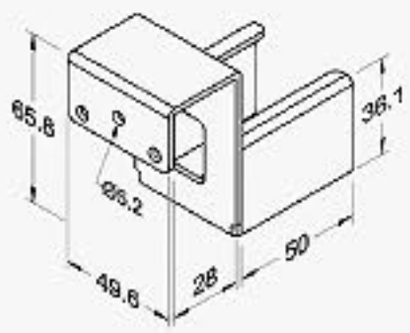


| | |
|---|---|
| Kg/PC | 0.220 |
| PC/CTN | 35 |

## R-85H2A

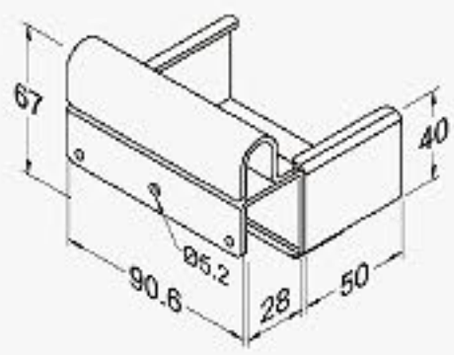


| | |
|---|---|
| Kg/PC | 0.405 |
| PC/CTN | 30 |

R Series

# ROLLER TRACKS （R-60H）

SURFACE : WZ

## R-60BH1

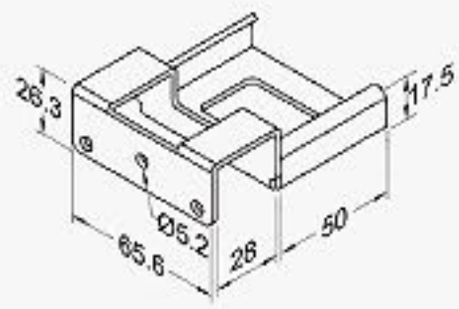


| | |
|---|---|
| Kg/PC | 0.220 |
| PC/CTN | 50 |

## R-60BH2

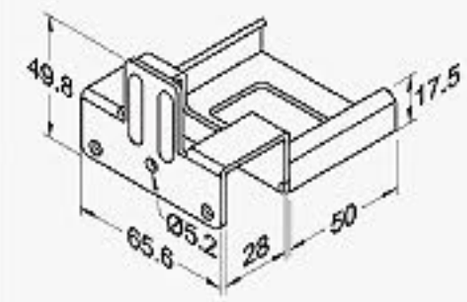


| | |
|---|---|
| Kg/PC | 0.300 |
| PC/CTN | 35 |

## R-60BH3

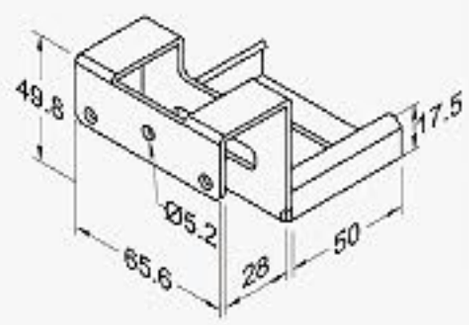


| | |
|---|---|
| Kg/PC | 0.240 |
| PC/CTN | 45 |

## R-60BH4

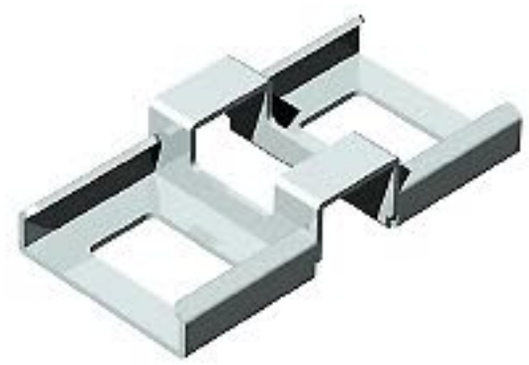

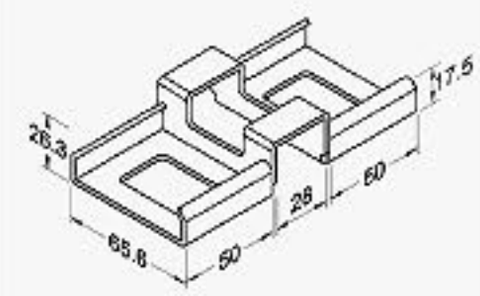


| | |
|---|---|
| Kg/PC | 0.263 |
| PC/CTN | 50 |

## R-60BH5

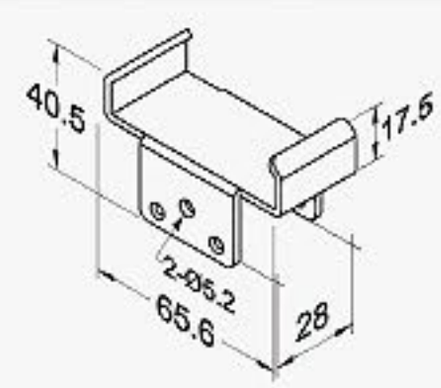


| | |
|---|---|
| Kg/PC | 0.140 |
| PC/CTN | 70 |

## R-60BH6

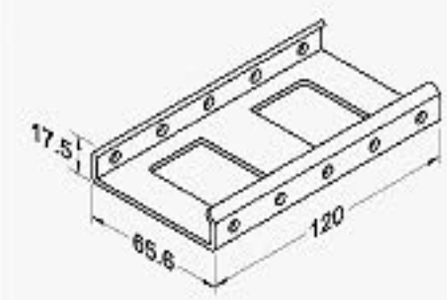


| | |
|---|---|
| Kg/PC | 0.215 |
| PC/CTN | 80 |

## R-60BH6A

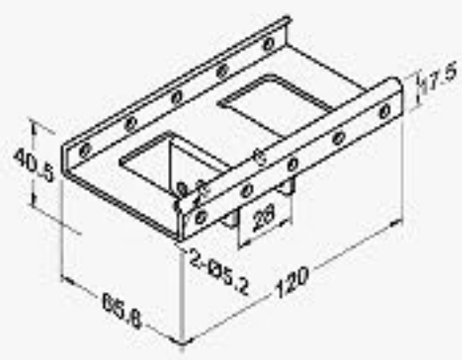


| | |
|---|---|
| Kg/PC | 0.267 |
| PC/CTN | 35 |

## R-60BH31

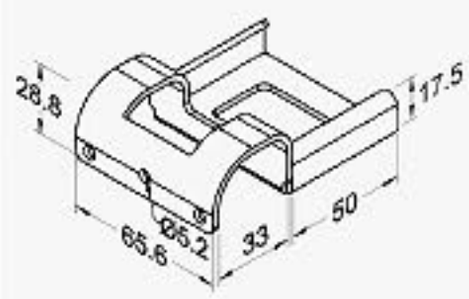


| | |
|---|---|
| Kg/PC | 0.267 |
| PC/CTN | 35 |

## R-60BH33

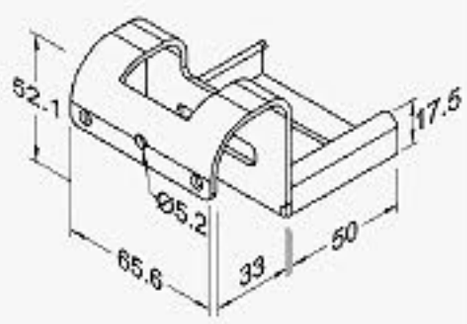


| | |
|---|---|
| Kg/PC | 0.267 |
| PC/CTN | 35 |

# ROLLER TRACKS （R-80H）

## R-80BH1

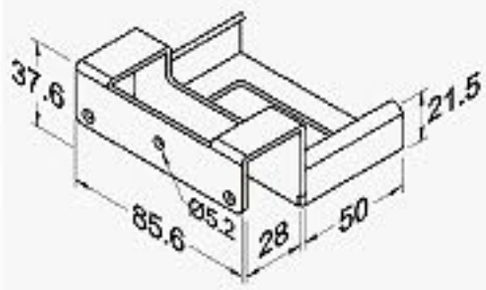


| | |
|---|---|
| Kg/PC | 0.220 |
| PC/CTN | 50 |

## R-80BH2

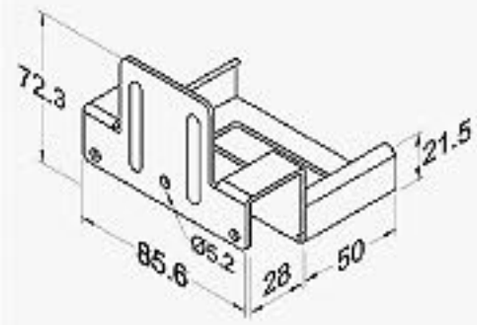


| | |
|---|---|
| Kg/PC | 0.300 |
| PC/CTN | 35 |

## R-80BH3

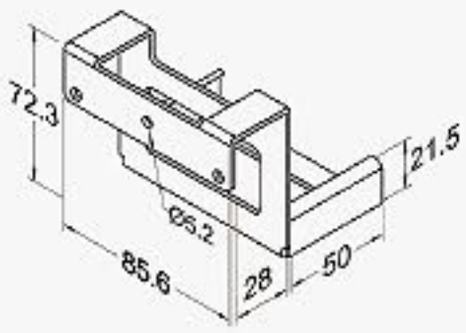


| | |
|---|---|
| Kg/PC | 0.240 |
| PC/CTN | 45 |

## R-80BH4

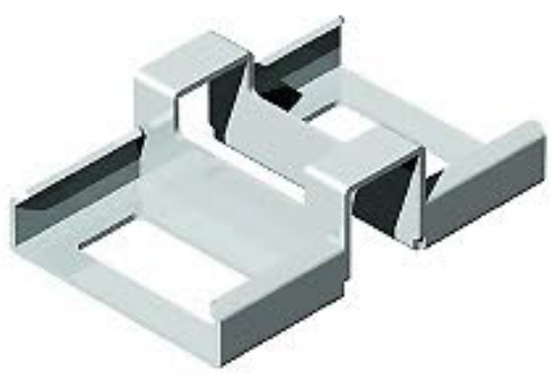

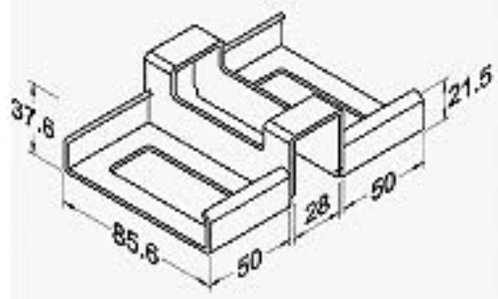


| | |
|---|---|
| Kg/PC | 0.263 |
| PC/CTN | 50 |

## R-80BH5






| | |
|---|---|
| Kg/PC | 0.140 |
| PC/CTN | 70 |

## R-80BH6

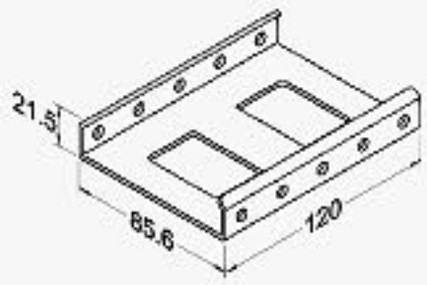


| | |
|---|---|
| Kg/PC | 0.215 |
| PC/CTN | 80 |

## R-80BH6A

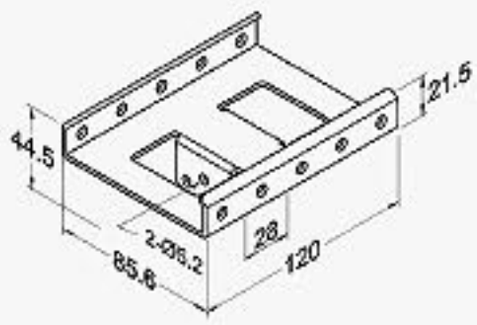


| | |
|---|---|
| Kg/PC | 0.267 |
| PC/CTN | 35 |

## R-80BH31

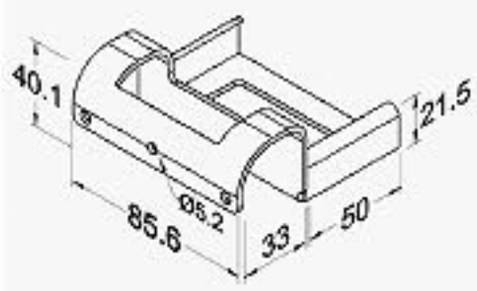


| | |
|---|---|
| Kg/PC | 0.267 |
| PC/CTN | 35 |

## R-80BH33

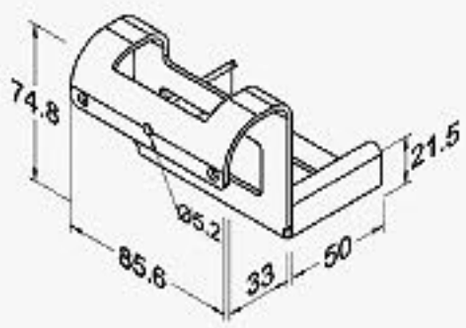


| | |
|---|---|
| Kg/PC | 0.267 |
| PC/CTN | 35 |

R Series

# ROLLER TRACKS （R-85H）

SURFACE : WZ

## R-85BH1

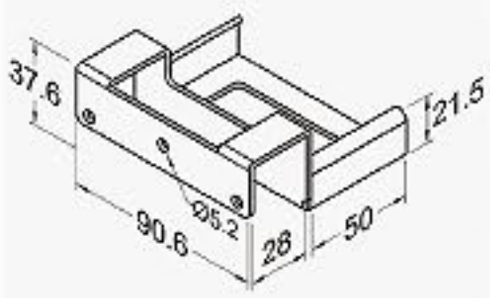


| | |
|---|---|
| Kg/PC | 0.220 |
| PC/CTN | 50 |

## R-85BH2

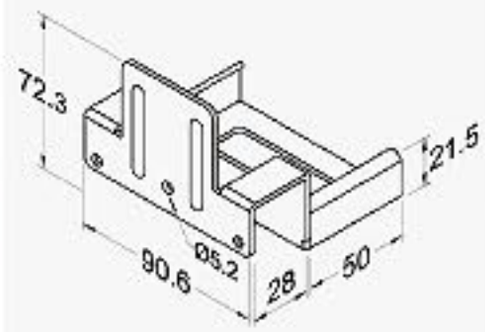


| | |
|---|---|
| Kg/PC | 0.300 |
| PC/CTN | 35 |

## R-85BH3

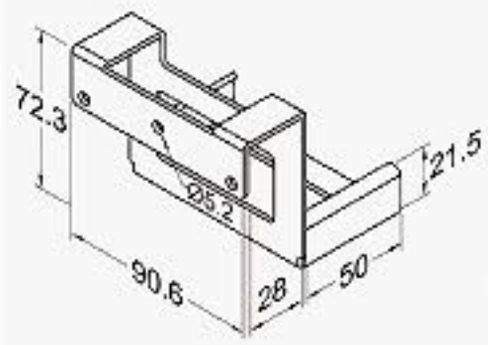


| | |
|---|---|
| Kg/PC | 0.240 |
| PC/CTN | 45 |

## R-85BH4

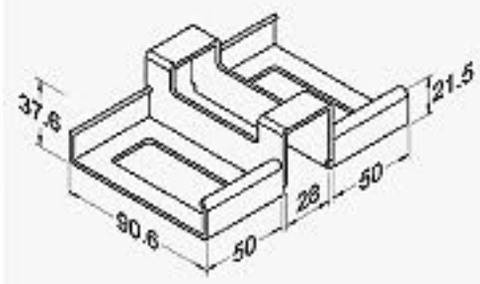


| | |
|---|---|
| Kg/PC | 0.263 |
| PC/CTN | 50 |

## R-85BH5

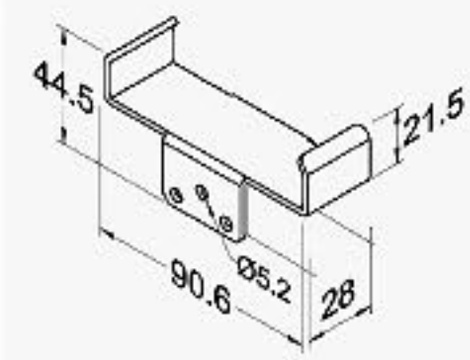


| | |
|---|---|
| Kg/PC | 0.140 |
| PC/CTN | 70 |

## R-85BH6

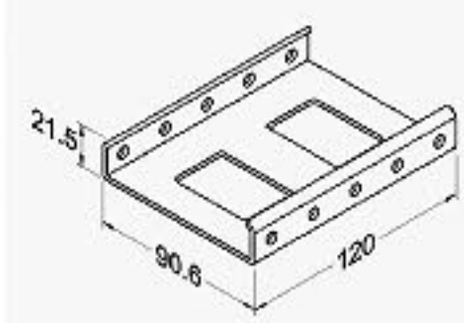


| | |
|---|---|
| Kg/PC | 0.215 |
| PC/CTN | 80 |

## R-85BH6A

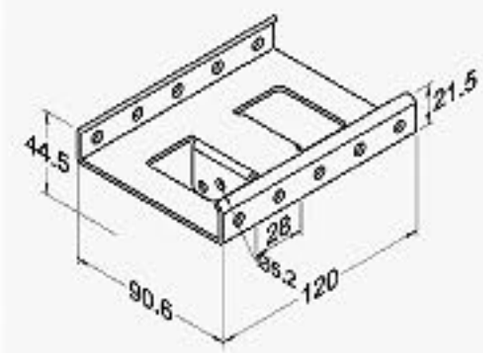


| | |
|---|---|
| Kg/PC | 0.267 |
| PC/CTN | 35 |

## R-85BH31

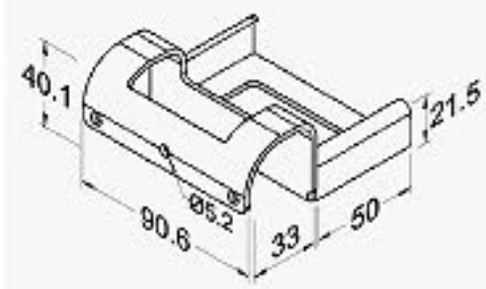


| | |
|---|---|
| Kg/PC | 0.267 |
| PC/CTN | 35 |

## R-85BH33

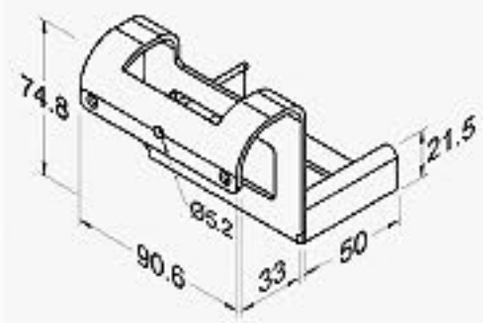


| | |
|---|---|
| Kg/PC | 0.267 |
| PC/CTN | 35 |

## R-85H1

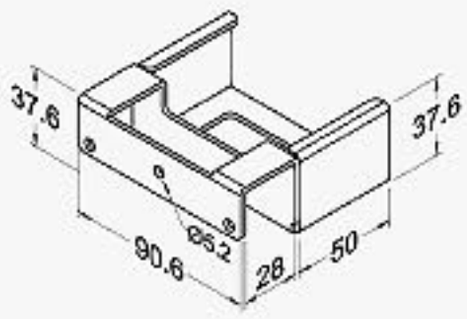


| | |
|---|---|
| Kg/PC | 0.220 |
| PC/CTN | 50 |

## R-85H2

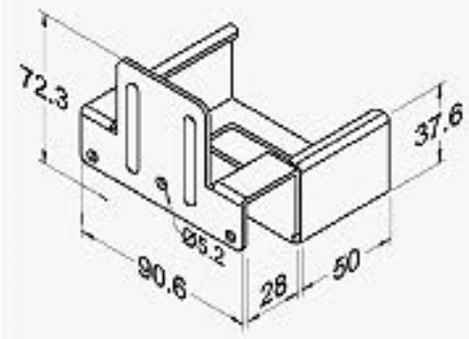


| | |
|---|---|
| Kg/PC | 0.300 |
| PC/CTN | 35 |

## R-85H3

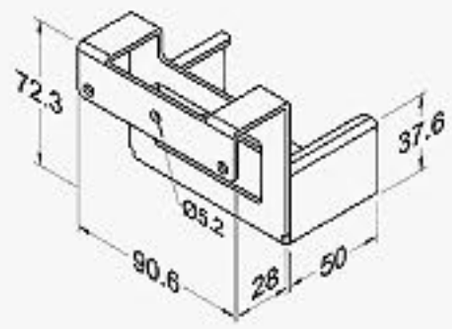


| | |
|---|---|
| Kg/PC | 0.240 |
| PC/CTN | 45 |

## R-85H31

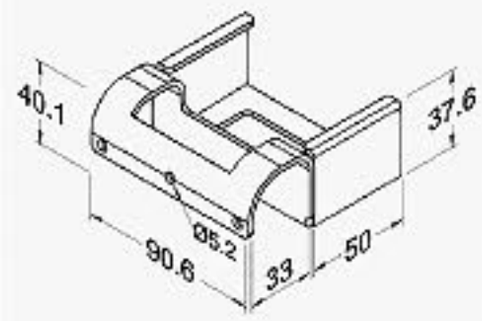


| | |
|---|---|
| Kg/PC | 0.300 |
| PC/CTN | 35 |

## R-85H33

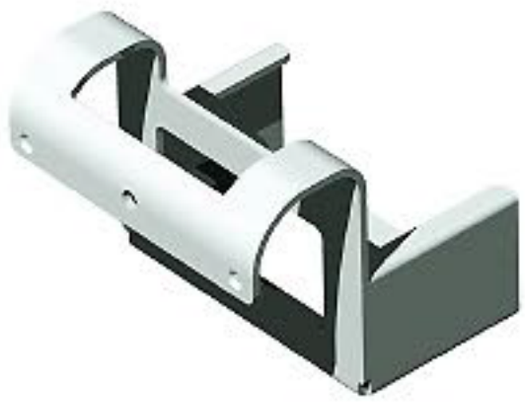

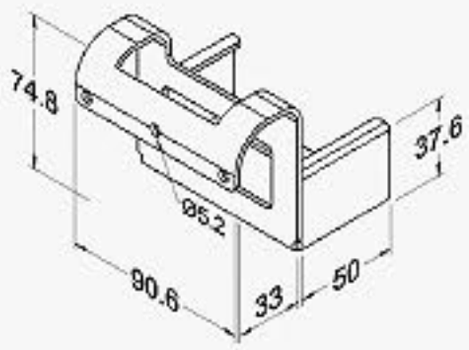


| | |
|---|---|
| Kg/PC | 0.240 |
| PC/CTN | 45 |

# P Series

## PLASTICS

## P-1

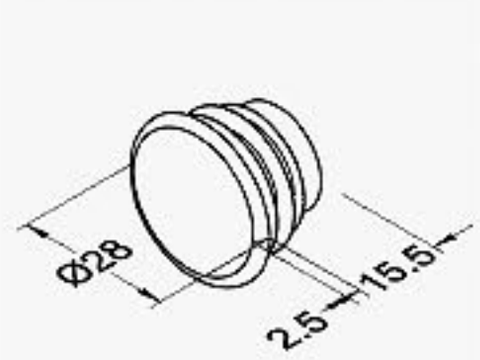


| | |
|---|---|
| Kg/PC | 0.003 |
| PC/CTN | 400 |

## P-1A

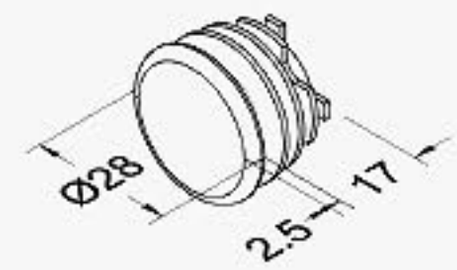


| | |
|---|---|
| Kg/PC | 0.003 |
| PC/CTN | 400 |

## P-2

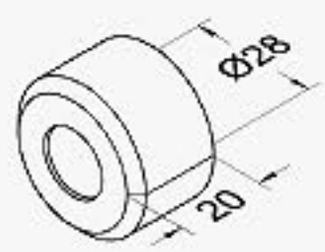


| | |
|---|---|
| Kg/PC | 0.009 |
| PC/CTN | 200 |

## P-2A

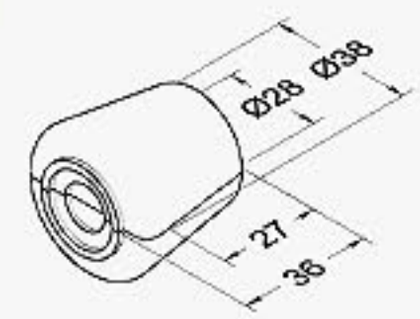


| | |
|---|---|
| Kg/PC | 0.017 |
| PC/CTN | 100 |

## P-3

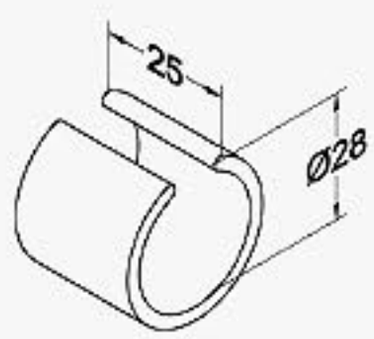


| | |
|---|---|
| Kg/PC | 0.005 |
| PC/CTN | 300 |

## P-4

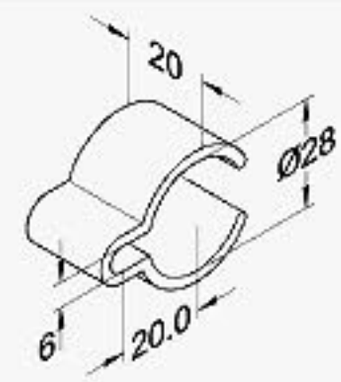


| | |
|---|---|
| Kg/PC | 0.005 |
| PC/CTN | 300 |

## P-5

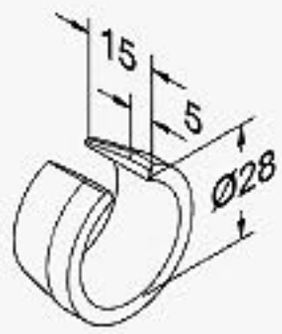


| | |
|---|---|
| Kg/PC | 0.003 |
| PC/CTN | 500 |

## P-6

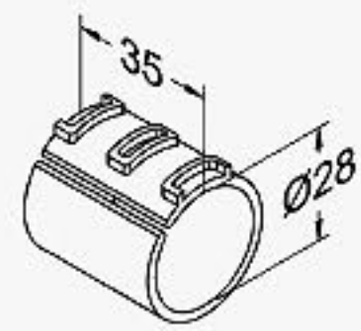


| | |
|---|---|
| Kg/PC | 0.006 |
| PC/CTN | 150 |

## P-7

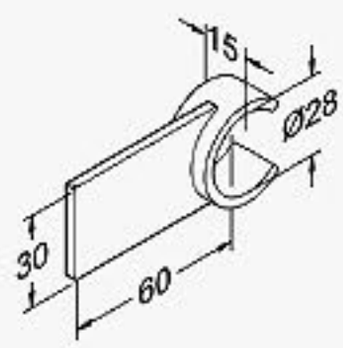


| | |
|---|---|
| Kg/PC | 0.010 |
| PC/CTN | 200 |

## P-7A

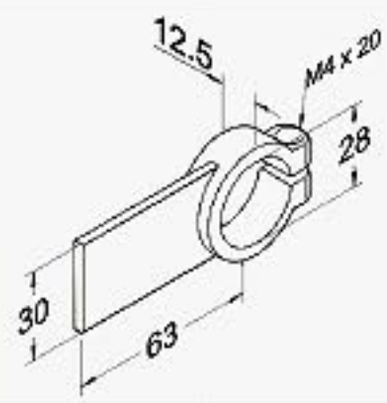


| | |
|---|---|
| Kg/PC | 0.012 |
| PC/CTN | 200 |

Unit : mm

## P-8

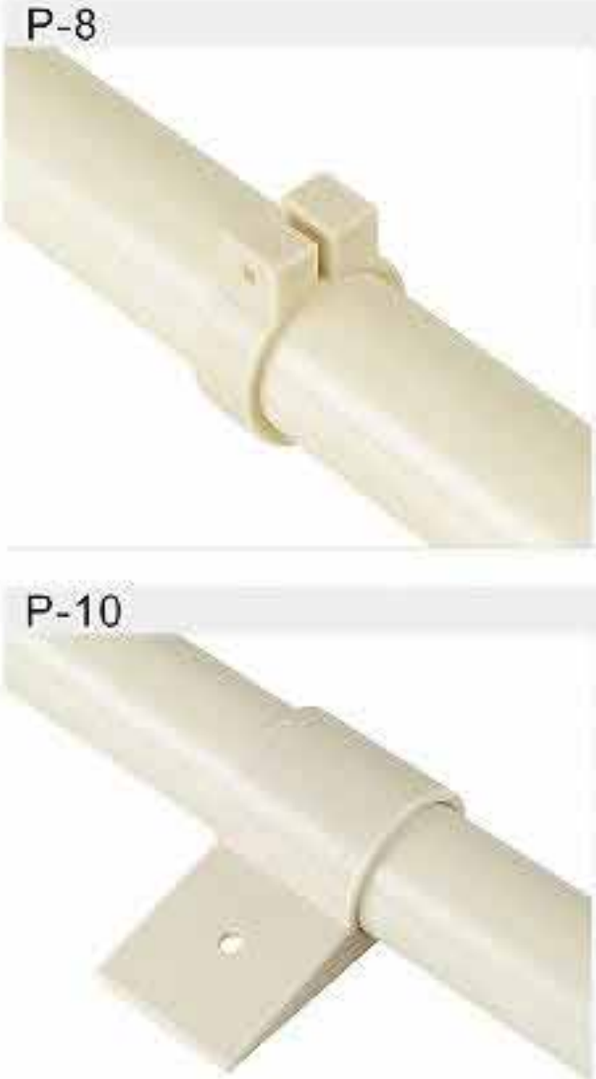

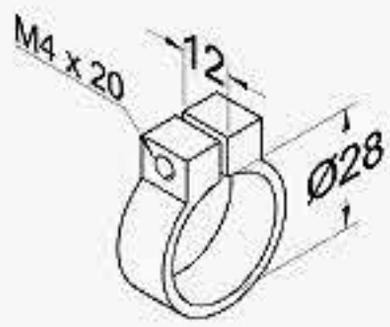


| | |
|---|---|
| Kg/PC | 0.005 |
| PC/CTN | 300 |

## P-9

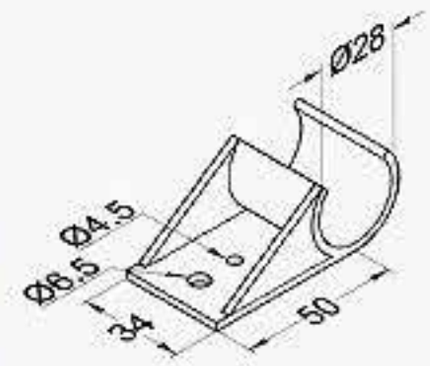


| | |
|---|---|
| Kg/PC | 0.014 |
| PC/CTN | 100 |

## P-10



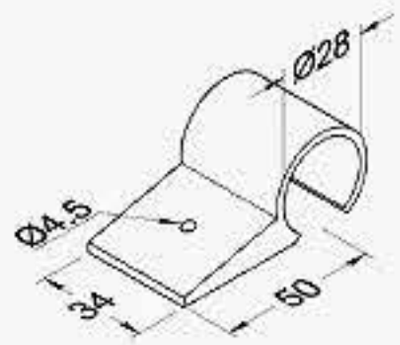


| | |
|---|---|
| Kg/PC | 0.014 |
| PC/CTN | 100 |

## P-11

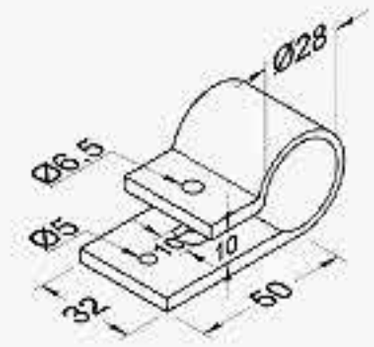


| | |
|---|---|
| Kg/PC | 0.018 |
| PC/CTN | 100 |

## P-13

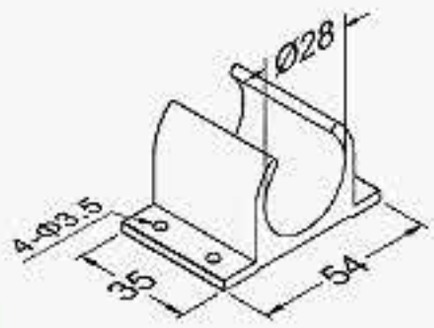


| | |
|---|---|
| Kg/PC | 0.014 |
| PC/CTN | 100 |

## P-14

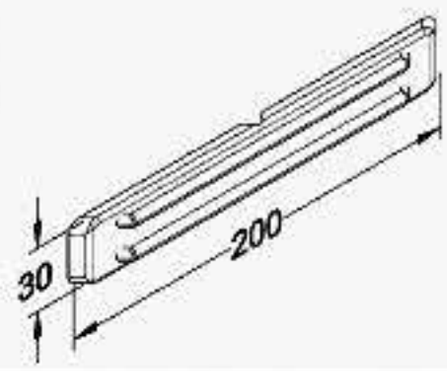


| | |
|---|---|
| Kg/PC | 0.042 |
| PC/CTN | 100 |

## P-L1

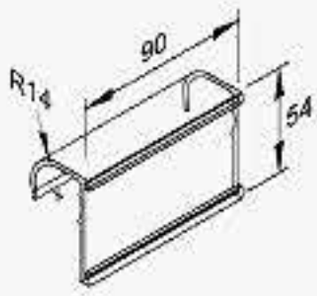


| | |
|---|---|
| Kg/PC | 0.040 |
| PC/CTN | 60 |

## P-L1A

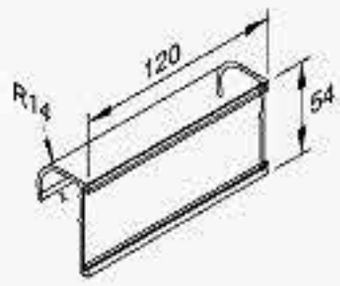


| | |
|---|---|
| Kg/PC | 0.053 |
| PC/CTN | 50 |

## P-L2

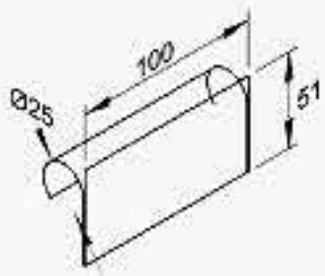


| | |
|---|---|
| Kg/PC | 0.014 |
| PC/CTN | 120 |

## P-L2A

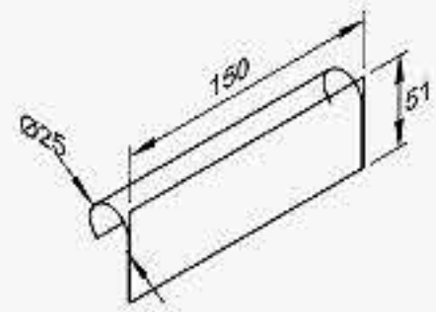


| | |
|---|---|
| Kg/PC | 0.022 |
| PC/CTN | 60 |

## P-L2B

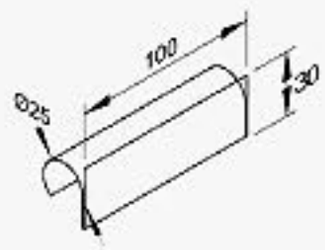


| | |
|---|---|
| Kg/PC | 0.013 |
| PC/CTN | 100 |

## P-L2C

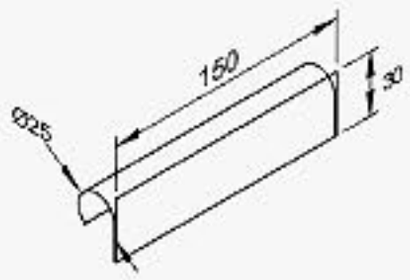


| | |
|---|---|
| Kg/PC | 0.020 |
| PC/CTN | 60 |

## P-L2D

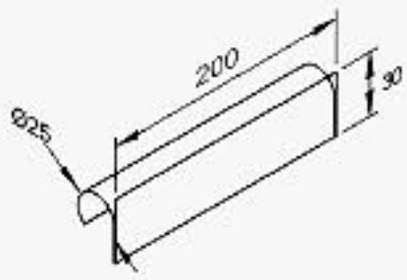


| | |
|---|---|
| Kg/PC | 0.026 |
| PC/CTN | 50 |

## P-L3

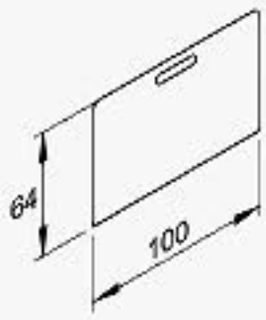


| | |
|---|---|
| Kg/PC | 0.006 |
| PC/CTN | 1000 |

## P-L3A

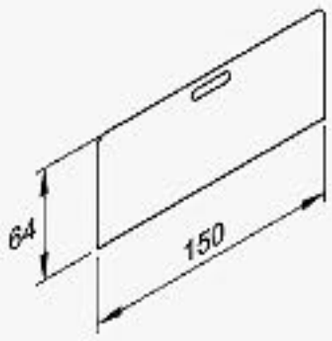


| | |
|---|---|
| Kg/PC | 0.009 |
| PC/CTN | 700 |

## P-L3B

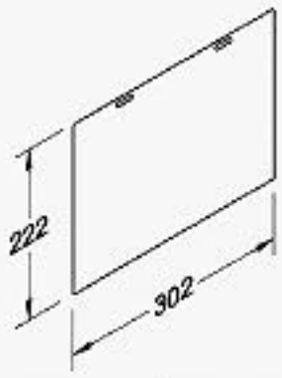


| | |
|---|---|
| Kg/PC | 0.088 |
| PC/CTN | 100 |

## P-L3C

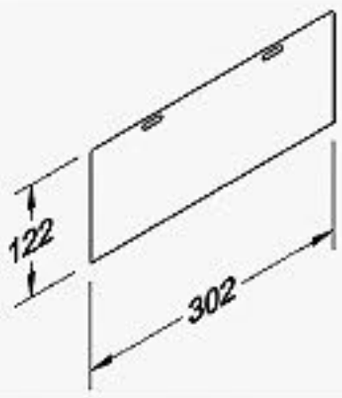


| | |
|---|---|
| Kg/PC | 0.045 |
| PC/CTN | 150 |

## P-L3D

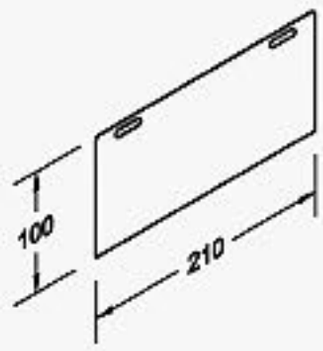


| | |
|---|---|
| Kg/PC | 0.029 |
| PC/CTN | 500 |

## P-L4

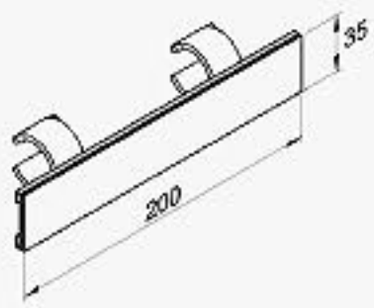


| | |
|---|---|
| Kg/PC | 0.045 |
| PC/CTN | 150 |

# F Series

## METAL ACCESSORIES

SURFACE : WZ

## F-1

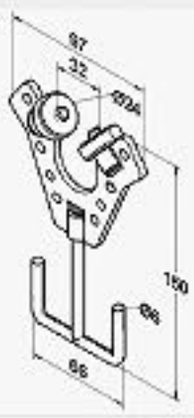


| | |
|---|---|
| Kg/PC | 0.158 |
| PC/CTN | 50 |

## F-2

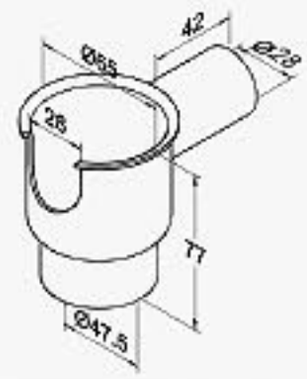


| | |
|---|---|
| Kg/PC | 0.200 |
| PC/CTN | 20 |

## F-2A

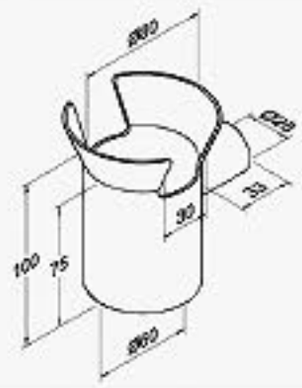


| | |
|---|---|
| Kg/PC | 0.250 |
| PC/CTN | 10 |

## F-3

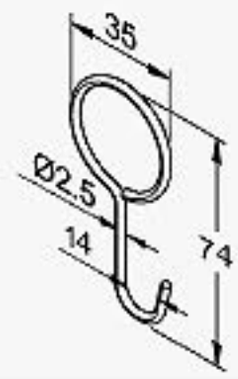


| | |
|---|---|
| Kg/PC | 0.006 |
| PC/CTN | 800 |

## F-3A

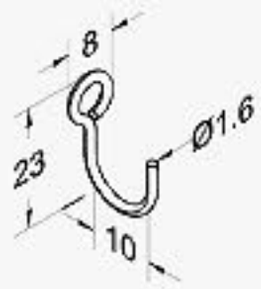


| | |
|---|---|
| Kg/PC | 0.001 |
| PC/CTN | 10000 |

## F-3B

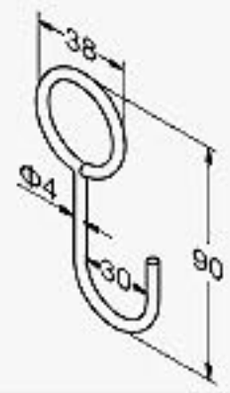


| | |
|---|---|
| Kg/PC | 0.020 |
| PC/CTN | 300 |

## F-3C

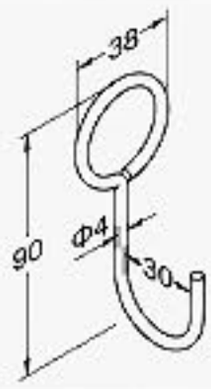


| | |
|---|---|
| Kg/PC | 0.020 |
| PC/CTN | 300 |

## F-4

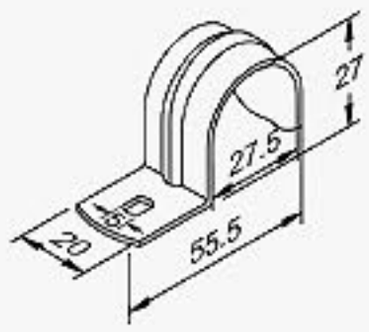


| | |
|---|---|
| Kg/PC | 0.020 |
| PC/CTN | 300 |

## F-4A（Use with F-10/F-10A/F-21）

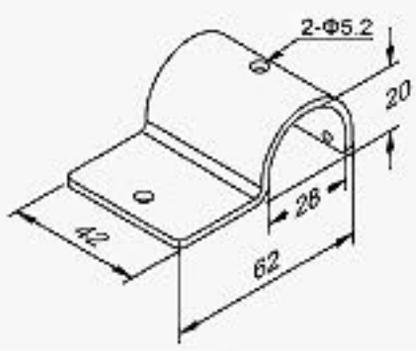


| | |
|---|---|
| Kg/PC | 0.070 |
| PC/CTN | 150 |

## F-5

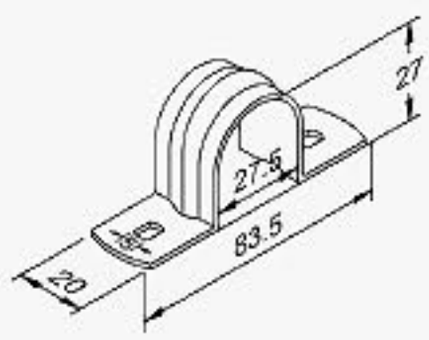


| | |
|---|---|
| Kg/PC | 0.026 |
| PC/CTN | 200 |

Unit : mm

## F-6

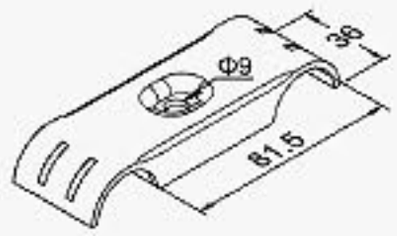


| | |
|---|---|
| Kg/PC | 0.104 |
| PC/CTN | 130 |

## F-7

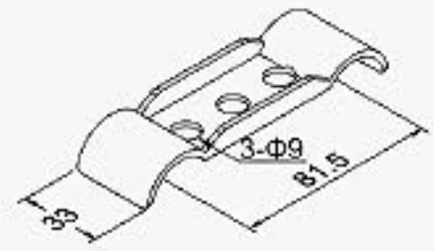


| | |
|---|---|
| Kg/PC | 0.079 |
| PC/CTN | 240 |

## F-8

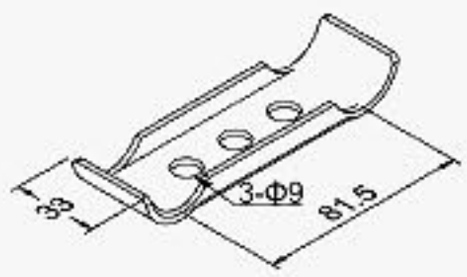


| | |
|---|---|
| Kg/PC | 0.082 |
| PC/CTN | 240 |

## F-9

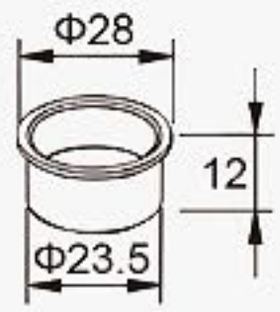


| | |
|---|---|
| Kg/PC | 0.013 |
| PC/CTN | 800 |

## F-9A

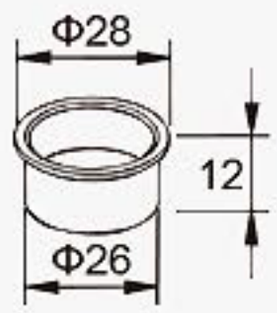


| | |
|---|---|
| Kg/PC | 0.013 |
| PC/CTN | 800 |

## F-10 （Use with F-4A/F-10A/F-21）

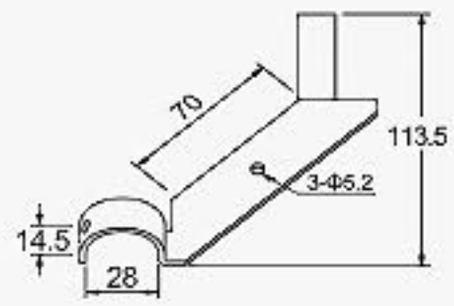


| | |
|---|---|
| Kg/PC | 0.072 |
| PC/CTN | 90 |

## F-10A （Use with F-4A/F-10/F-21）

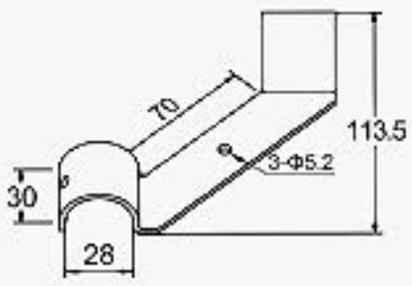


| | |
|---|---|
| Kg/PC | 0.106 |
| PC/CTN | 75 |

## F-10B （Use with F-4A/F-10/F-21）

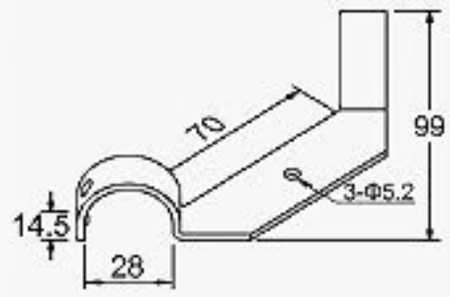


| | |
|---|---|
| Kg/PC | 0.065 |
| PC/CTN | 75 |

## F-11

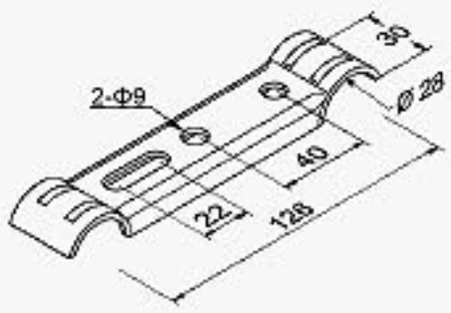


| | |
|---|---|
| Kg/PC | 0.108 |
| PC/CTN | 120 |

## F-11A

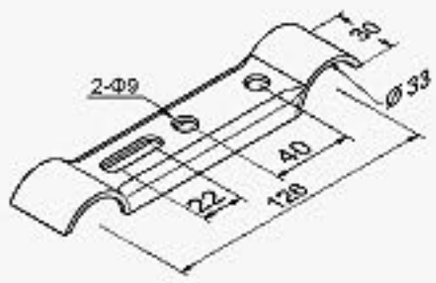


| | |
|---|---|
| Kg/PC | 0.109 |
| PC/CTN | 120 |

# METAL ACCESSORIES

SURFACE : ●BK ○WZ

## F-12A/F-12B/F-12C

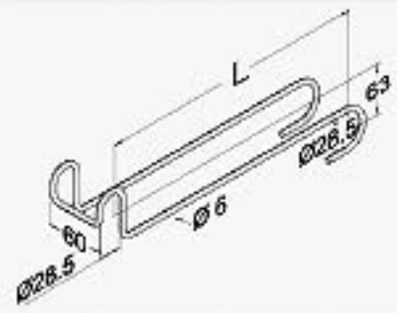


| Part No. | F-12A | F-12B | F-12C |
|---|---|---|---|
| L | 235 | 335 | 435 |
| Kg/PC | 0.183 | 0.225 | 0.255 |
| PC/CTN | 40 | 30 | 25 |

## F-13A/F-13B/F-13C/F-13D

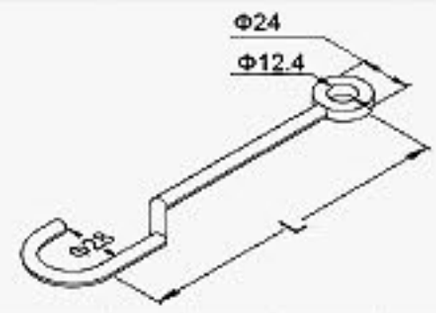


| Part No. | F-13A | F-13B | F-13C | F-13D |
|---|---|---|---|---|
| L | 60 | 100 | 150 | 200 |
| Kg/PC | 0.039 | 0.046 | 0.059 | 0.070 |
| PC/CTN | 350 | 230 | 180 | 150 |

## F-14

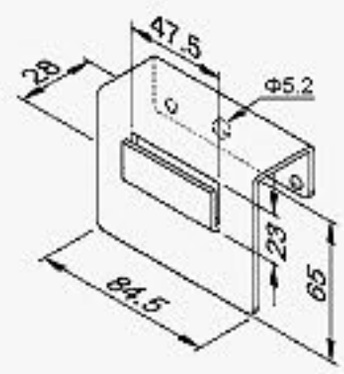


| | |
|---|---|
| Kg/PC | 0.188 |
| PC/CTN | 60 |

## F-15

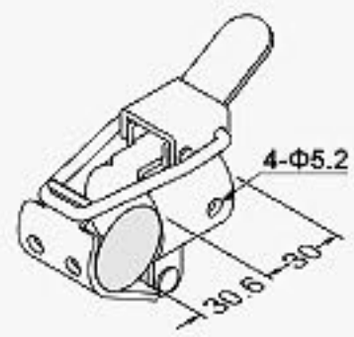


| | |
|---|---|
| Kg/PC | 0.145 |
| PC/CTN | 75 |

## F-16

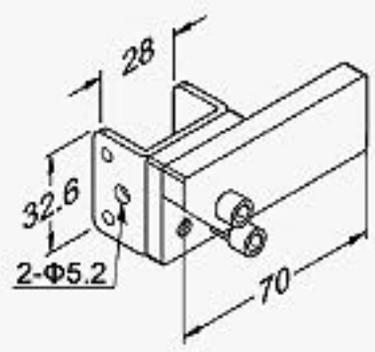


| | |
|---|---|
| Kg/PC | 0.230 |
| PC/CTN | 130 |

## F-17

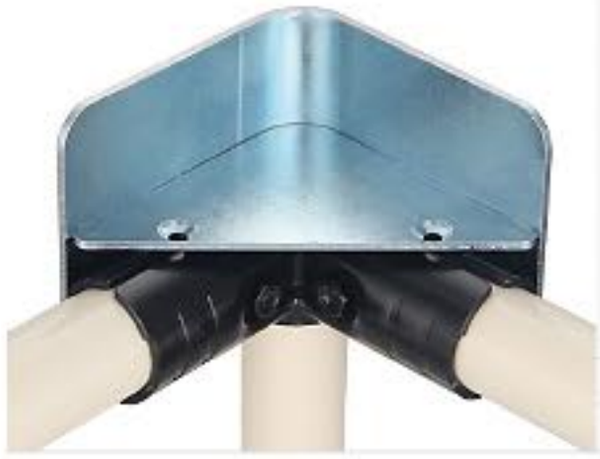

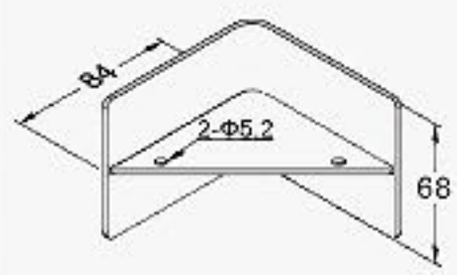


| | |
|---|---|
| Kg/PC | 0.275 |
| PC/CTN | 25 |

## F-18

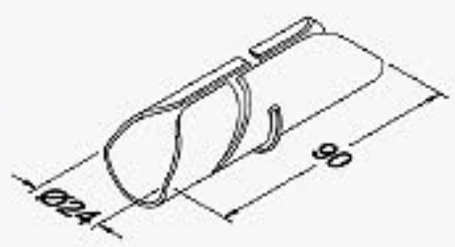


| | |
|---|---|
| Kg/PC | 0.060 |
| PC/CTN | 120 |

## F-18A

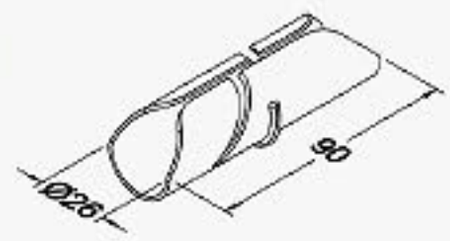


| | |
|---|---|
| Kg/PC | 0.060 |
| PC/CTN | 120 |

## F-19

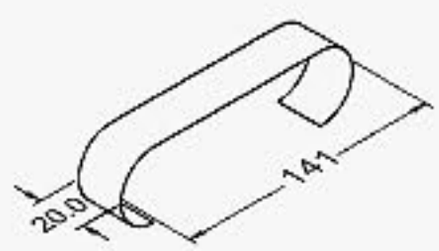


| | |
|---|---|
| Kg/PC | 0.015 |
| PC/CTN | 200 |

## F-20

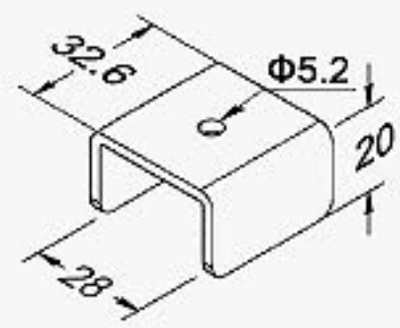


| | |
|---|---|
| Kg/PC | 0.037 |
| PC/CTN | 500 |

Unit : mm

## F-21（Use with F-4A/F-10/F-10A）

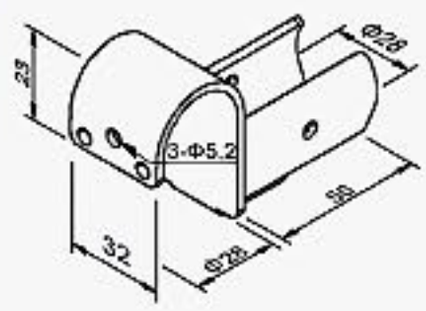


| | |
|---|---|
| Kg/PC | 0.130 |
| PC/CTN | 80 |

## F-22

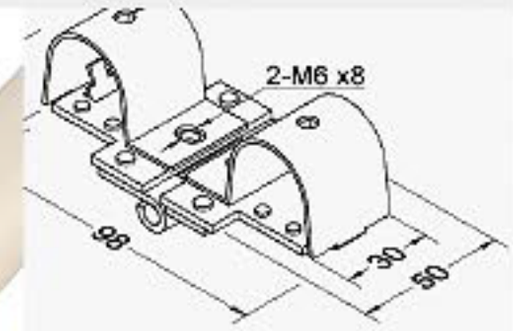


| | |
|---|---|
| Kg/PC | 0.190 |
| PC/CTN | 40 |

## F-25A

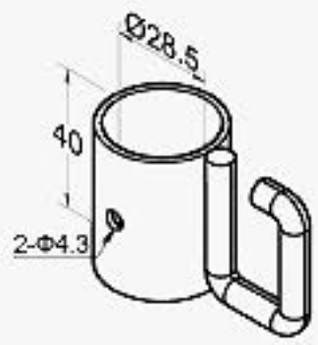


| | |
|---|---|
| Kg/PC | 0.075 |
| PC/CTN | 120 |

## F-25B

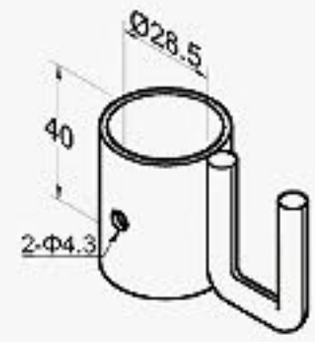


| | |
|---|---|
| Kg/PC | 0.073 |
| PC/CTN | 120 |

## F-25C

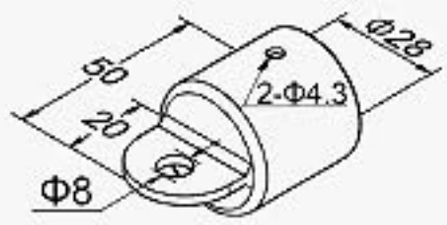


| | |
|---|---|
| Kg/PC | 0.041 |
| PC/CTN | 220 |

## F-26

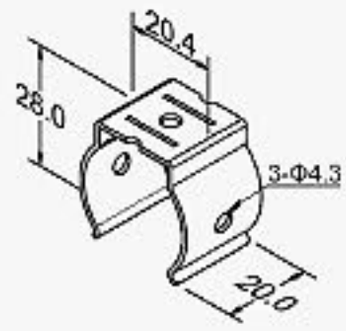


| | |
|---|---|
| Kg/PC | 0.009 |
| PC/CTN | 400 |

## F-27

| | |
|---|---|
| Kg/PC | 0.041 |
| PC/CTN | 220 |

# L Series

## LEVELING FEET

## L-1

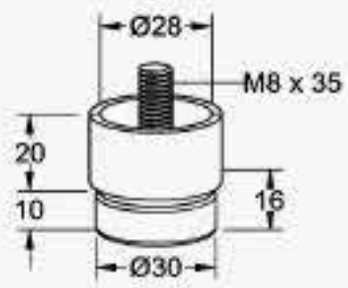


| | |
|---|---|
| Kg/PC | 0.043 |
| PC/CTN | 180 |

## L-2

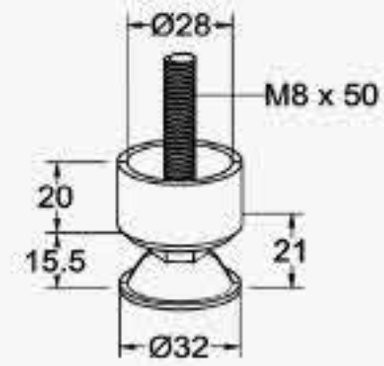


| | |
|---|---|
| Kg/PC | 0.052 |
| PC/CTN | 140 |

## L-2A

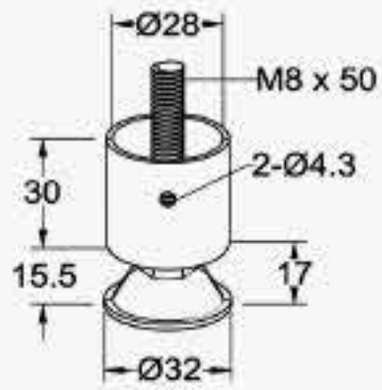


| | |
|---|---|
| Kg/PC | 0.068 |
| PC/CTN | 130 |

## L-3

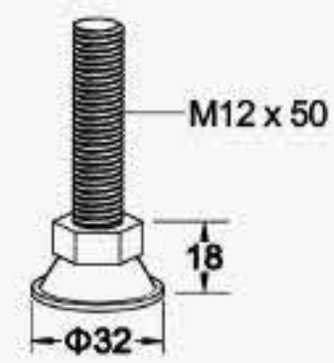


| | |
|---|---|
| Kg/PC | 0.071 |
| PC/CTN | 200 |

## L-3A

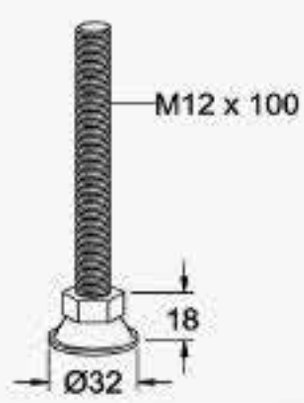


| | |
|---|---|
| Kg/PC | 0.104 |
| PC/CTN | 130 |

## L-3B

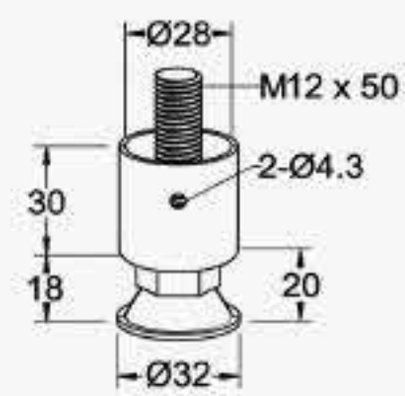


| | |
|---|---|
| Kg/PC | 0.100 |
| PC/CTN | 120 |

## L-3C

| Part No. | L-3CCP10 | L-3CCP12 |
|---|---|---|
| Kg/PC | 0.191 | 0.191 |
| PC/CTN | 100 | 100 |

## L-3D

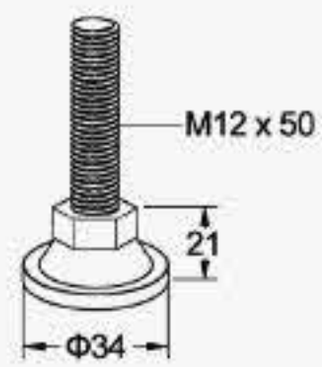


| | |
|---|---|
| Kg/PC | 0.074 |
| PC/CTN | 200 |

## L-4

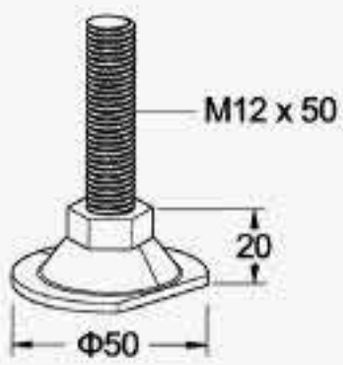


| | |
|---|---|
| Kg/PC | 0.094 |
| PC/CTN | 120 |

## L-4A

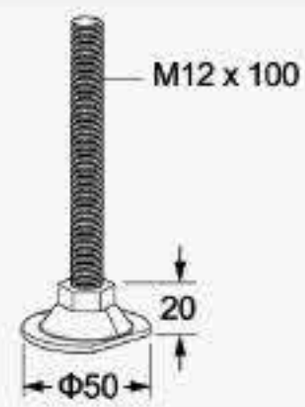


| | |
|---|---|
| Kg/PC | 0.129 |
| PC/CTN | 80 |

SURFACE : WZ

## L-4B

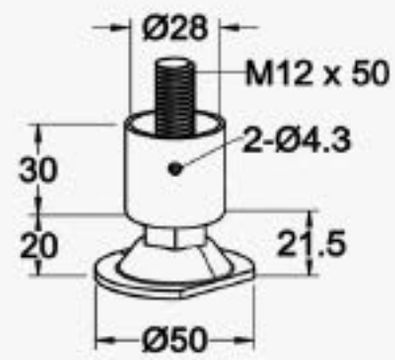


| | |
|---|---|
| Kg/PC | 0.125 |
| PC/CTN | 85 |

## L-4C

| Part No. | L-4CCP10 | L-4CCP12 |
|---|---|---|
| Kg/PC | 0.215 | 0.215 |
| PC/CTN | 70 | 70 |

## L-4D

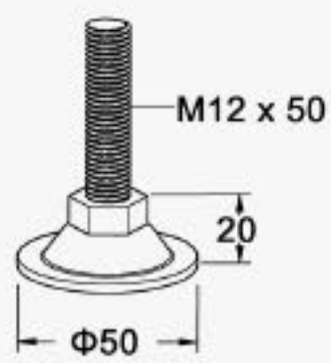


| | |
|---|---|
| Kg/PC | 0.094 |
| PC/CTN | 120 |

## L-4E

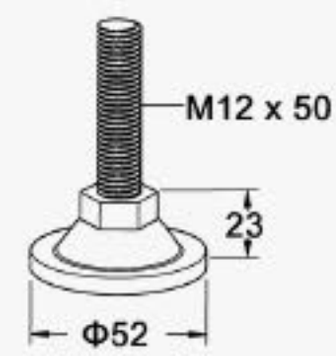


| | |
|---|---|
| Kg/PC | 0.105 |
| PC/CTN | 100 |

## L-4F

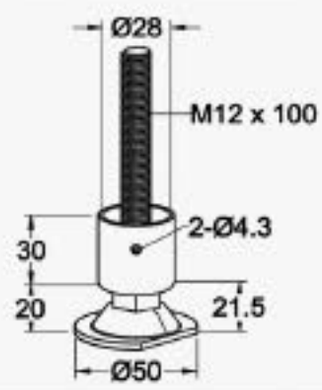


| | |
|---|---|
| Kg/PC | 0.180 |
| PC/CTN | 100 |

## L-5

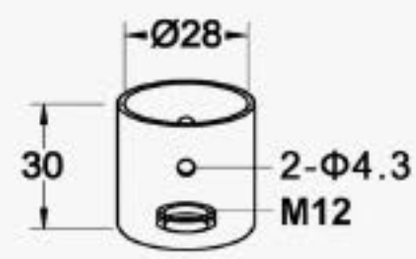


| | |
|---|---|
| Kg/PC | 0.033 |
| PC/CTN | 200 |

## L-6

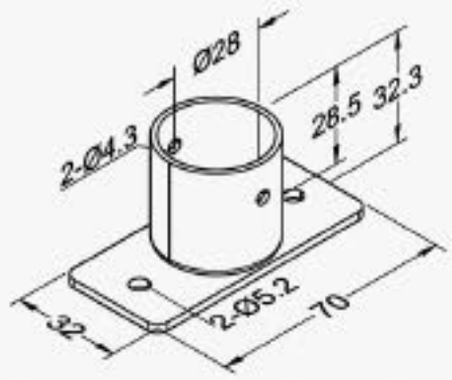


| | |
|---|---|
| Kg/PC | 0.073 |
| PC/CTN | 120 |

## L-6A

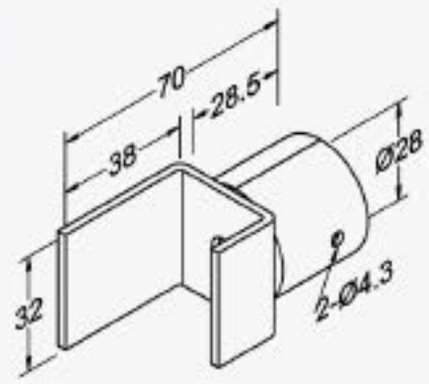


| | |
|---|---|
| Kg/PC | 0.083 |
| PC/CTN | 140 |

## L-6B

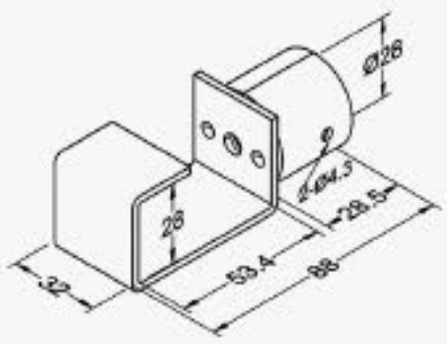


| | |
|---|---|
| Kg/PC | 0.112 |
| PC/CTN | 100 |

## L-7

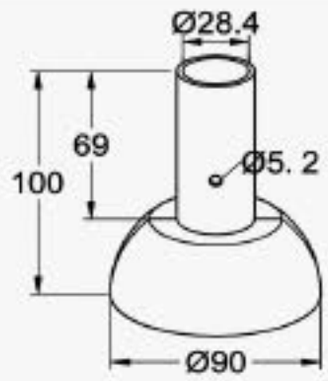


| | |
|---|---|
| Kg/PC | 0.395 |
| PC/CTN | 10 |

## L-8

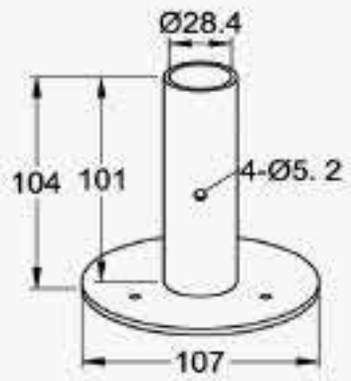


| | |
|---|---|
| Kg/PC | 0.460 |
| PC/CTN | 15 |

## L-9

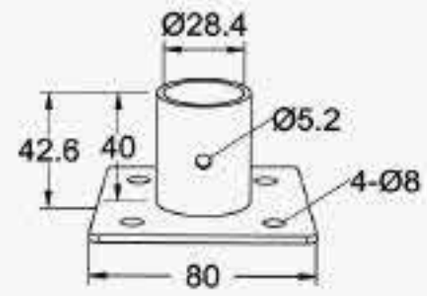


| | |
|---|---|
| Kg/PC | 0.230 |
| PC/CTN | 30 |

# N Series

# FASTENERS

| Picture | Part No. | Desc. | Surface | Kg/PC | PC/CTN | Apply |
|---|---|---|---|---|---|---|
| N-1 | | | | | | |
| | N-1M6BZ | Nut | BZ | 0.002 | 5400 | Bolt |
| | N-1M6BL | | BL | | | |
| | N-1M6WZ | | WZ | | | |
| N-2 | | | | | | |
| | N-2BZ | Bolt | BZ | 0.007 | 2700 | Nut |
| | N-2BL | | BL | | | |
| | N-2WZ | | WZ | | | |
| N-2 | | | | | | |
| | N-2M612BZ | Bolt | BZ | 0.005 | 4000 | Nut |
| | N-2M612WZ | | WZ | | | |
| N-3 | | | | | | |
| | N-3M840WZ | Bolt | WZ | 0.017 | 1200 | M8 Nut |
| N-6 | | | | | | |
| | N-6M8WZ | Nylon Nut | WZ | 0.002 | 4000 | M8 Bolt |

| Picture | Part No. | Classification | Application | Kg/PC | PC/CTN | Apply |
|---|---|---|---|---|---|---|
| N-8A (M10) | | | | | | |
| | N-8ACP10M10WZ | Coated Pipe | Φ28 x T1.0 | 0.075 | 350 | Φ24.0 |
| | N-8ASUS09M10WZ | SUS Pipe | Φ28 x T0.9 | 0.084 | 320 | Φ26.0 |
| | N-8ASUS11M10WZ | | Φ28 x T1.1 | 0.090 | | Φ25.6 |
| N-8A (M12) | | | | | | |
| | N-8ACP07M12WZ | Coated Pipe | Φ28 x T0.7 | 0.075 | 350 | Φ24.6 |
| | N-8ACP10M12WZ | | Φ28 x T1.0 | | | Φ24.0 |
| | N-8ACP14M12WZ | | Φ28 x T1.4 | | | Φ23.2 |
| | N-8ACP20M12WZ | | Φ28 x T2.0 | | | Φ22.0 |
| | N-8ASUS07M12WZ | SUS Pipe | Φ28 x T0.7 | 0.084 | 320 | Φ26.4 |
| | N-8ASUS09M12WZ | | Φ28 x T0.9 | 0.090 | | Φ26.0 |
| | N-8ASUS11M12WZ | | Φ28 x T1.1 | | | Φ25.6 |
| N-9 | | | | | | |
| | N-9 | Srew Set | NA | 0.030 | 0000 | Srew Set |

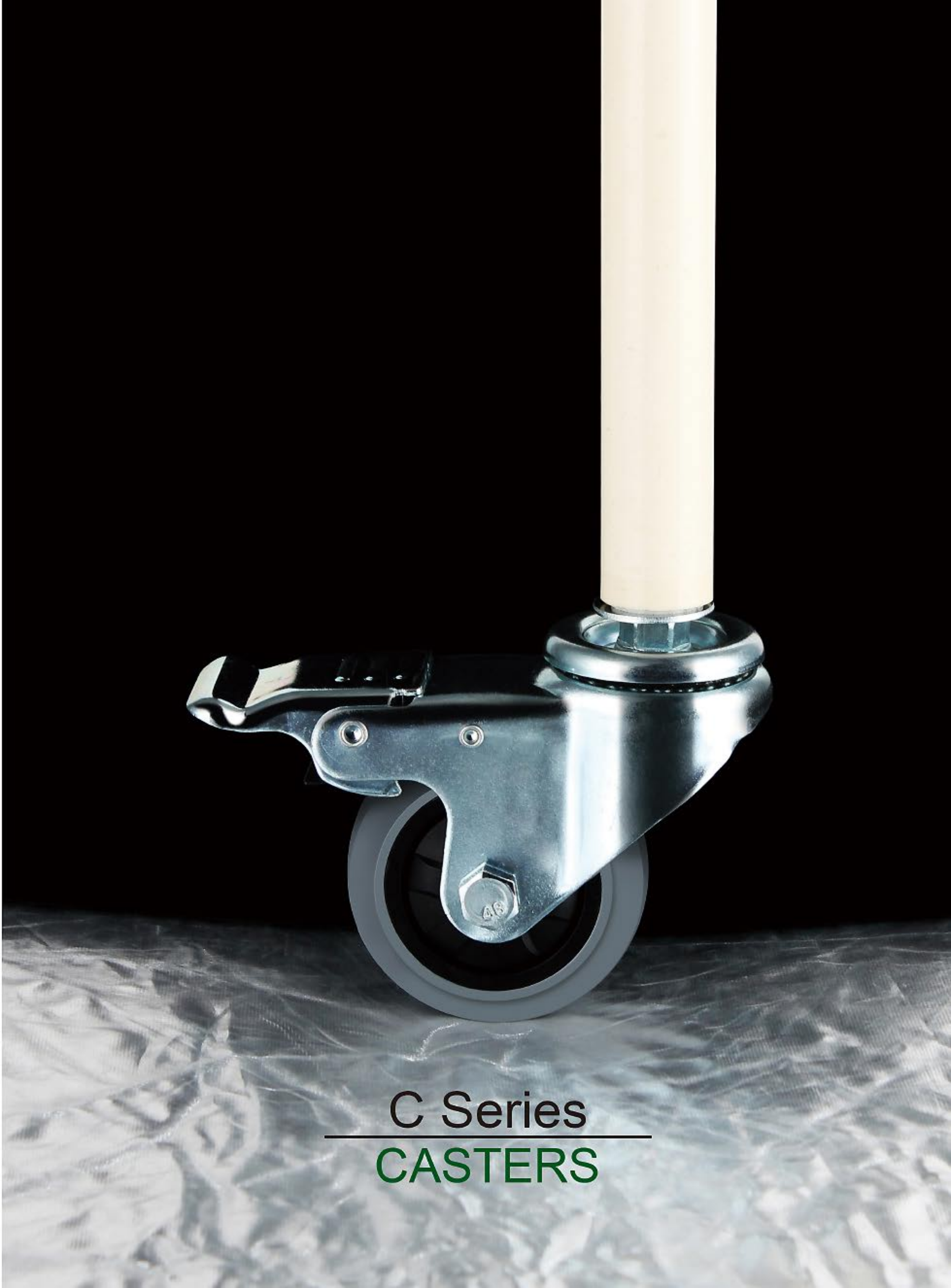

# C Series

## CASTERS

# CASTERS

| Picture | Part No. | (mm) | Wheel Material | (mm) | (Kg) | (mm) | (mm) |
|---|---|---|---|---|---|---|---|
| C-4A | | | | | | | |
| | C-4ATPR75GM12 | 75 | TPR | 32 | 100 | 104 | M12 X 60 |
| | C-4ATPR100GM12 | 100 | TPR | 32 | 130 | 130 | M12 X 60 |
| C-4 | | | | | | | |
| | C-4TPR75GM12 | 75 | TPR | 32 | 100 | 104 | M12 X 60 |
| | C-4TPR100GM12 | 100 | TPR | 32 | 130 | 130 | M12 X 60 |
| C-4A ESD | | | | | | | |
| | C-4ATPRESD75GM12 | 75 | TPR ESD | 32 | 100 | 104 | M12 X 60 |
| | C-4ATPRESD100GM12 | 100 | TPR ESD | 32 | 130 | 130 | M12 X 60 |
| C-4 ESD | | | | | | | |
| | C-4TPRESD75GM12 | 75 | TPR ESD | 32 | 100 | 104 | M12 X 60 |
| | C-4TPRESD100GM12 | 100 | TPR ESD | 32 | 130 | 130 | M12 X 60 |

| Picture | Part No. | (mm) | Wheel Material | (mm) | (Kg) | (mm) | (mm) | (mm) |
|---|---|---|---|---|---|---|---|---|
| C-5 | | | | | | | | |
| | C-5TPR100G | 100 | TPR | 32 | 130 | 128 | 95 X 67 | 73 X 45 |
| C-7 | | | | | | | | |
| | C-7TPR100G | 100 | TPR | 32 | 130 | 128 | 95 X 67 | 73 X 45 |
| C-8 | | | | | | | | |
| | C-8TPR150G | 150 | TPR | 50 | 410 | 190 | 114 X 100 | 84 X 71 |
| C-10A | | | | | | | | |
| | C-10ATPR150G | 150 | TPR | 50 | 410 | 190 | 114 X 100 | 84 X 71 |

O Series

# TOOLS

## O-2

| | |
|---|---|
| O | 5 mm |
| L1 | 123 mm |
| L2 | 16 mm |
| Kg/PC | 0.103 |
| PC/CTN | 20 |

## O-3/O-3A

| | |
|---|---|
| Cutting Range | 3-32 mm |
| Set | 1 X O-3 |
| Optional Parts | 2 X O-3A |
| Kg/PC | 0.417 / 0.019 |
| PC/CTN | 12 |

## O-4

| | |
|---|---|
| Cutting Range | Φ 6 - Φ 40 mm |
| Kg/PC | 0.230 |
| PC/CTN | 32 |
| Tube inside and outside trimming knife. | |

## O-5/O-5A

| | |
|---|---|
| Packaging (included) | 1xO-5 ordinary trimming blade |
| | 1xO-5A high strength trimming blade |
| Kg/PC | 0.060 / 0.021 |

## O-6

| | |
|---|---|
| O | 13 / 16 mm |
| Thicknes | 3.2 mm |
| Kg/PC | 0.050 |
| PC/CTN | 200 |
| For caster assembling. | |

## O-7

| | |
|---|---|
| Cutting Range | Φ 25 - Φ 45 mm |
| Kg/PC | 0.465 |
| PC/CTN | 1 |
| Claming the pipe when cutting. | |